12/05/2016 12:44

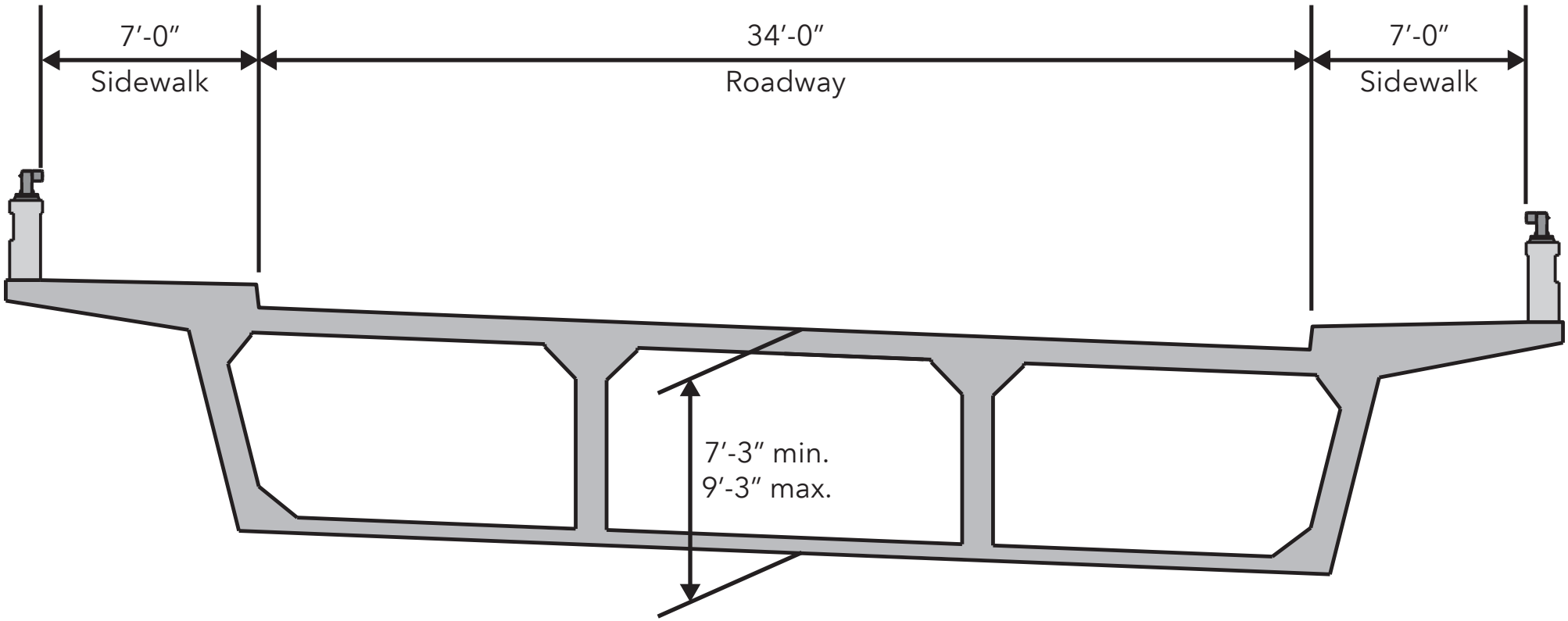
7′-0″
Sidewalk
34′-0″
Roadway
7′-0″
Sidewalk
7′-3″ min.
9′-3″ max.

Notes:
Use Anchor Pile Detail for piles marked thusly: •.

Piles with no uplift are marked thusly: ○.

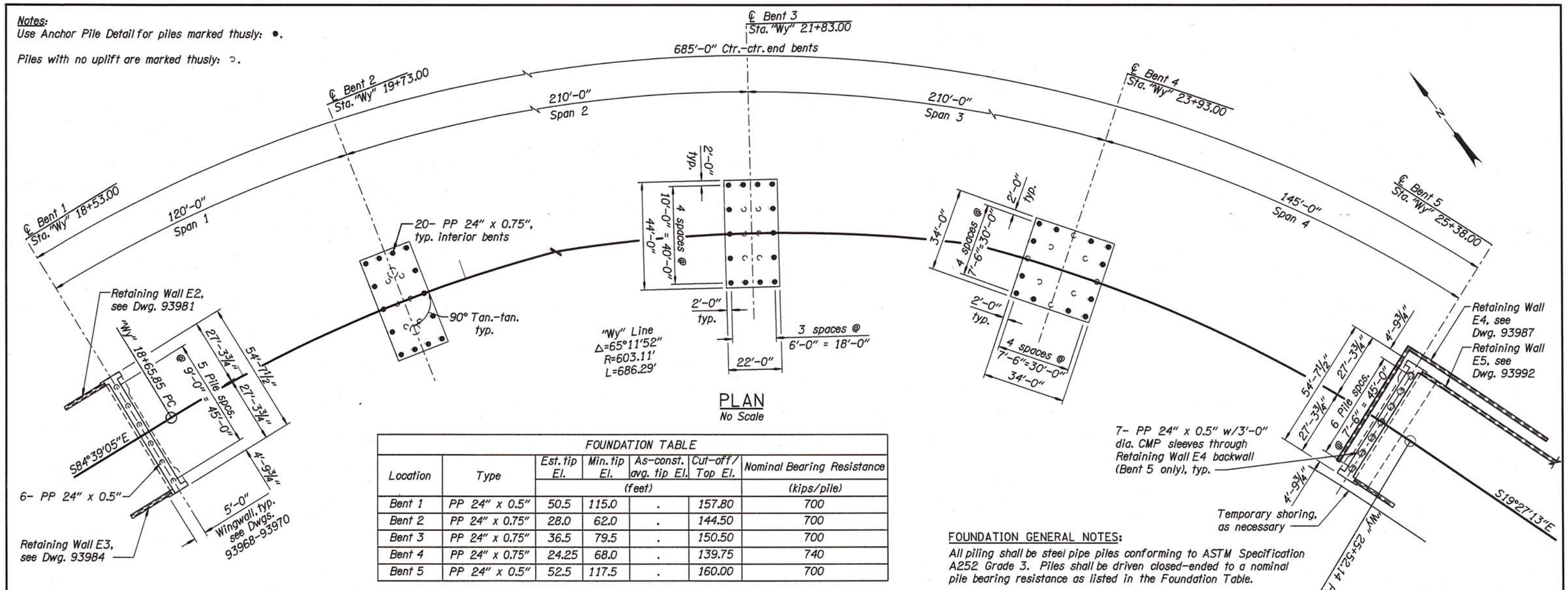

PLAN
No Scale

FOUNDATION TABLE						
Location	Type	Est. tip El.	Min. tip El.	As-const. avg. tip El.	Cut-off / Top El.	Nominal Bearing Resistance
		(feet)				(kips/pile)
Bent 1	PP 24" x 0.5"	50.5	115.0	.	157.80	700
Bent 2	PP 24" x 0.75"	28.0	62.0	.	144.50	700
Bent 3	PP 24" x 0.75"	36.5	79.5	.	150.50	700
Bent 4	PP 24" x 0.75"	24.25	68.0	.	139.75	740
Bent 5	PP 24" x 0.5"	52.5	117.5	.	160.00	700

FOUNDATION GENERAL NOTES:

All piling shall be steel pipe piles conforming to ASTM Specification A252 Grade 3. Piles shall be driven closed-ended to a nominal pile bearing resistance as listed in the Foundation Table.

Grind the top of pile as required to provide direct contact between the top plate and top of pile for at least 75% of the pile circumference and a maximum gap of 1/16" for the remaining circumference.

Determine nominal pile bearing resistance from the results of dynamic pile load tests as specified in the Special Provisions.

Perform dynamic load test on first pile driven at each bent.

Bents 2 & 3 similar.

For footing details, see Dwgs. 93940, 93941, and 93942.

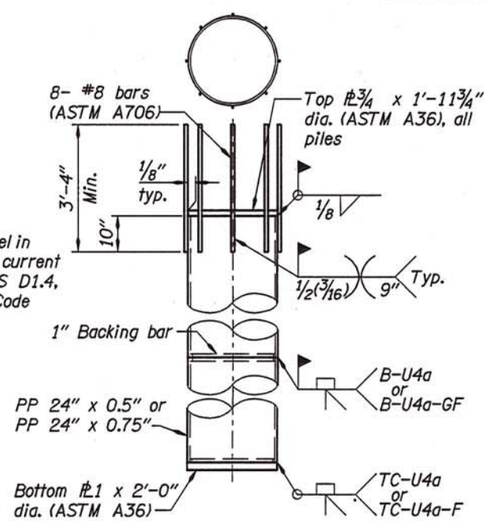

Note:
Weld reinforcing steel in accordance with the current edition of ANSI/AWS D1.4, "Structural Welding Code Reinforcing Steel".

ANCHOR PILE DETAIL
No Scale

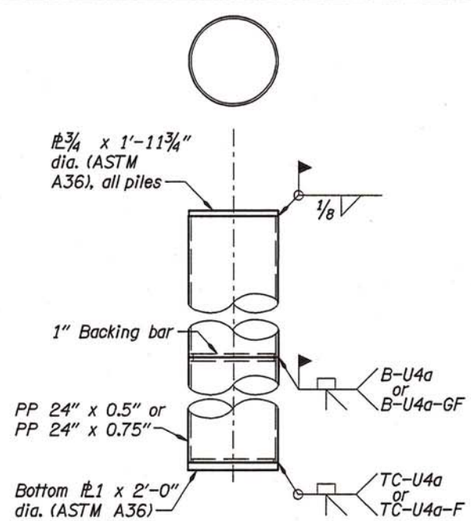

PIPE PILE DETAIL
No Scale

SCALE WARNING
If scale bar doesn't measure one inch then drawing is not to scale

REGISTERED PROFESSIONAL ENGINEER 16588 OREGON JULY 20, 1993 ERIC EDWARD BONN
EXPIRES: 12/31/15

△	DATE	REVISION	BY

OREGON DEPARTMENT OF TRANSPORTATION

OBEC CONSULTING ENGINEERS www.obec.com
CORPORATE OFFICE: 920 COUNTRY CLUB ROAD, SUITE 100B EUGENE, OREGON 97401-8089
REGIONAL OFFICES: LAKE OSWEGO; SALEM; MEDFORD, OREGON; VANCOUVER, WASHINGTON

DRAFTER: OBEC CAD
DESIGNER: Eric E. Bonn, PE
CHECKER: Michael C. McNulty, PE
REVIEWER: Robert Goodrich, PE
ACCOMPANIED BY DWGS. See Dwg. 93934

WYNOOSKI ST (NEWBERG) OVER HWY 39
OR18: NEWBERG-DUNDEE BYPASS (PHASE 1E)
SALMON RIVER HIGHWAY (M.P. 59.16)
YAMHILL COUNTY

FOOTING PLAN

STRUCTURE NO.	DATE	CALC. BOOK	SHEET	DRAWING NO.
22012	May 2014	6596	6 OF 47	93939