ASPIRE™

THE CONCRETE BRIDGE MAGAZINE

FALL 2016

www.aspirebridge.org

Jeremiah Morrow Bridge
Warren County, Ohio

NORTH TORREY PINES ROAD BRIDGE
Del Mar, California

SR 520 EVERGREEN POINT FLOATING BRIDGE—EAST APPROACH BRIDGE
Seattle and Medina, Washington

BRIDGE OVER CULVERT ON SR 210 (US 231)
Dothan, Alabama

PRECAST CONCRETE SEGMENTAL SUBSTRUCTURES

Presorted Standard
Postage Paid
Lebanon Junction, KY
Permit No. 567

CONTENTS

Photo: Kleinfelder Inc.

Photo: Washington State Department of Transportation.

Photo: Alabama Department of Transportation.

Features

Departments

Photo: Cianbro.

Advertisers Index

EDITORIAL

Photo: PCI.

Take Risks and Fail Fast

William Nickas, *Editor-in-Chief*

A few months ago, during the time that I was writing this message, I was doing a project with my oldest daughter and needed a pocket knife. I opened a drawer and there was the Swiss army knife that was inscribed with "AASHTO Bridge 1998 - Nashville, Tennessee." That was my first annual business meeting of AASHTO Subcommittee on Bridges and Structures (SCOBS) as the Florida Department of Transportation (FDOT) voting member. It was also the meeting where I would finally meet those legendary "LRFD innovators." You see, I had worked at FDOT for a brilliant engineer, Paul Csagoly, who came from Ontario, Canada, where he was part of the first bridge code development team using the load and resistance factor design (LRFD) methodologies. He would talk about the risk a province took and how the United States needed a bridge code overhaul. I had only heard about the co-principal investigators, Dr. Kulicki and Dr. Mertz, who started working on this in the late 1980s. And I had only read about and used what the initial research team had assembled for this momentous task. But then, I would meet this most humble and approachable gentleman, Dr. Dennis Mertz.

That was the beginning of my view inside the codification process. As a new AASHTO committee person, to watch and support the AASHTO SCOBS leadership of initially David Pope from Wyoming with Jim Roberts from CalTrans, and later Mal Kerley from Virginia, move this new specification forward was very rewarding (and yes, sometimes rocky). It was also interesting to see how critical it was to get assurances from a network of experts, such as Dr. Dennis Mertz. With LRFD came a new interest in deployable and implementable research. FHWA was always working to attain a date certain for full deployment and see the state bridge units take things to a new height. And as I reflect, Dennis was critical to allowing the United States to take the risk of LRFD. As Gregg Fredrick, chief engineer of Wyoming Department of Transportation and Chairman of AASHTO SCOBS, wrote recently in an email, "We have lost a gem, but he will forever influence our industry" and how very correct this describes Dennis' legacy efforts. (Read more on page 51 "The *AASHTO LRFD Bridge Design Specifications: A Retrospective.*")

What risks might the bridge design and construction industry be exposed to in the future? Like many of you, I've seen the concept and opportunities for self-driving or even autonomous vehicles. Now with satellite data, that idea has progressed quickly from magnets in the pavement as guidance systems to GPS and sensors. The initial concept of magnets as a guidance system failed, but in teaming up with Google to use GPS, car manufacturing has shown promise. The further enhancements seen with vehicle to vehicle communication will further refine the opportunity. Now what does that have to do with bridge design and construction you might ask?

Construction equipment articles are explaining changes coming and asking why not autonomous construction? The current deployment effort is centered around new backhoe, roller and paving equipment, and changing the inspection of the construction process. Jeff Immelt, the chairman and CEO of General Electric, recently talked about changing their business culture. He said, "we may be a century-old company, but we need to move quickly, take risks, fail fast, and behave like a startup to keep winning." He goes on to say ". . .use technology to help our people stay connected and allow more automated decision-making so you can look at an app and see what is going on inside the company."

Bridge engineers do not like to fail, but thank goodness a team of U.S. engineers took a risk on giving us the framework of LRFD. In the future, we may have to take risks with intelligent materials and other strategies to improve our built and future infrastructure investments.

Editor-in-Chief
William Nickas • wnickas@pci.org

Managing Technical Editor
Dr. Reid W. Castrodale

Contributing Editor
Dr. Henry G. Russell

Program Manager
Nancy Turner • nturner@pci.org

Associate Editor
Emily B. Lorenz • elorenz@pci.org

Layout Design
Casey Braun

Cover
The Jeremiah Morrow Bridge is the first cast-in-place, concrete segmental box-girder structure owned by the Ohio Department of Transportatio and built by Kokosing Inc. Photo: OmniPro Services.

Ad Sales
Jim Oestmann
Phone: (847) 838-0500 • Cell: (847) 924-5497
Fax: (847) 838-0555 • joestmann@arlpub.com

Reprints
Lisa Scacco • lscacco@pci.org

Publisher
Precast/Prestressed Concrete Institute
Robert Risser, President

Postmaster: Send address changes to *ASPIRE*, 200 W. Adams St., Suite 2100, Chicago, IL 60606. Standard postage paid at Chicago, IL, and additional mailing offices.

ASPIRE (Vol. 10, No. 4), ISSN 1935-2093 is published quarterly by the Precast/Prestressed Concrete Institute.

If you have a suggestion for a project or topic to be considered for *ASPIRE*, please send an email to info@aspirebridge.org

American Segmental Bridge Institute

Epoxy Interest Group

Expanded Shale Clay and Slate Institute

Portland Cement Association

Post-Tensioning Institute

Precast/Prestressed Concrete Institute

BRIDGE SERIES

4D BRIDGE PLUS | 4D BRIDGE | 4D BRIDGE pLT

LARSA 4D BRIDGE SERIES integrates all features into a single application providing process efficiency and delivering time savings. With innovative tools to support the life of a bridge project from design to construction, LARSA 4D is relied upon by bridge engineering professionals to deliver the most trusted solutions from short-span to demanding long-span bridge projects.

With 15-years of development guided by client input, LARSA 4D Version 8.0 continues to lead the industry with advanced modeling techniques that were infeasible just a decade ago. With new features coming in 2016 for composite construction, fine-mesh modeling, load rating and a new concrete bridge design module, LARSA 4D Version 8.0 meets the demanding needs of aging infrastructure and the modeling of complex materials to intuitively determine the behavior of bridges.

LARSA 4D VERSION 8.0

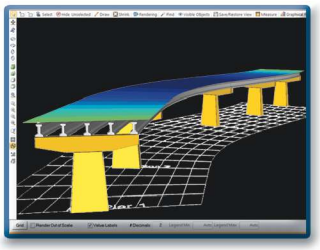

Coming Summer 2016

- Concrete Bridge Design Module
- New Tendon Editor
- Composite Construction
- 64-Bit Analysis Engine
- Extended AASHTO Load Rating

1-800-LARSA-01
for a free trial license visit www.LARSA4D.com

I-35W Bridge
FIGG Engineering Group

CONTRIBUTING AUTHORS

Dr. Oguzhan Bayrak is a professor at the University of Texas at Austin. Bayrak received the University of Texas System Board of Regents' outstanding teaching award in 2012 and was inducted into the university's Academy of Distinguished Teachers in 2014.

Frederick Gottemoeller is an engineer and architect, who specializes in the aesthetic aspects of bridges and highways. He is the author of *Bridgescape*, a reference book on aesthetics and was deputy administrator of the Maryland State Highway Administration.

Dr. Brian Kozy is the leader of the Structures Engineering Team for the Federal Highway Administration (FHWA) at FHWA Headquarters in Washington, D.C. He is responsible for national policy and guidance on bridge design and analysis.

Dr. Henry G. Russell is an engineering consultant who has been involved with the application of concrete in bridges for 40 years. He served as the managing technical editor of *ASPIRE*™ from its first edition in 2007 through the Fall issue of 2014.

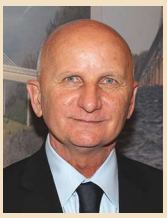

Rex L. Pearce is the Staunton District bridge engineer for the Virginia Department of Transportation. He holds a BSCE from the Virginia Polytechnic Institute and State University and has 29 years of bridge engineering experience.

CONCRETE CALENDAR 2016–2018

For links to websites, email addresses, or telephone numbers for these events, go to www.aspirebridge.org and select "EVENTS."

October 23-27, 2016
ACI Fall 2016 Concrete Convention and Exposition
Marriott Philadelphia
Philadelphia, Pa.

November 8-9, 2016
ASBI 28th Annual Convention
Long Beach Convention and Entertainment Center
Westin Long Beach Hotel
Long Beach, Calif.

November 21-23, 2016
fib Symposium 2016
Cape Town, South Africa

January 8-12, 2017
Transportation Research Board 96th Annual Meeting
Walter E. Washington Convention Center
Washington, D.C.

January 17-20, 2017
World of Concrete 2017
Las Vegas Convention Center
Las Vegas, Nev.

February 28-March 4, 2017
PCI Convention and National Bridge Conference at The Precast Show
Huntington Convention Center
Cleveland, Ohio

March 26-30, 2017
ACI Spring 2017 Concrete Convention and Exposition
Marriott Detroit at the Renaissance Center
Detroit, Mich.

March 27-29, 2017
2017 DBIA Design-Build in Transportation Conference
Minneapolis Convention Center
Minneapolis, Minn.

April 10-11, 2017
ASBI Grouting Certification Training
J.J. Pickle Research Campus – The University of Texas at Austin
Austin, Tex.

April 30-May 3, 2017
PTI Convention 2017
Hyatt Regency Atlanta
Atlanta, Ga.

May 9-10, 2017
FDOT, ASBI, and PTI sponsored Flexible Filler Certification Training
Tallahassee, Fla.

June 4-8, 2017
International Bridge Conference
Gaylord National Resort & Convention Center
National Harbor, Md.

June 11-15, 2017
AASHTO Subcommittee on Bridges and Structures Annual Meeting
The Davenport Grand
Spokane, Wash.

June 12-14, 2017
fib Symposium 2017
Maastricht, The Netherlands

July 30-August 4, 2017
AASHTO Subcommittee on Materials Annual Meeting
Sheraton Grand Phoenix
Phoenix, Ariz.

September 5-8, 2017
2017 Western Bridge Engineers' Seminar
Marriott Waterfront
Portland, Ore.

October 4-7, 2017
PCI Committee Days 2017
Loews Chicago O'Hare
Rosemont, Ill.

October 15-19, 2017
ACI Fall 2017 Concrete Convention and Exposition
Disneyland Hotel
Anaheim, Calif.

October 24-25, 2017
ASBI 29th Annual Convention
Marriott Marquis
New York, N.Y.

December 6-8, 2017
National ABC Conference
Hyatt Regency Miami
Miami, Fla.

January 7-11, 2018
Transportation Research Board 97th Annual Meeting
Walter E. Washington Convention Center
Washington, D.C.


Watson
Bowman
Acme
Watson Bowman Acme - your strongest partner for expansion control systems.
Expansion joints are a critical link to the sustainability of a bridge structure. The effects of failing joints or improper system selection will severely weaken the structural integrity of a bridge. WBA continues to enhance the performance, preservation and installation of bridge expansion joints.
wbacorp.com
BASF
We create chemistry

FAMILY FEELING

Kokosing's three generations of family employees keep the construction company focused on synergies that ensure efficient execution of every detail

by Craig A. Shutt

The profile of the Rich Street Bridge features post-tensioned precast concrete rib arches with reinforced concrete piers and abutments. Photo: Kokosing.

Though a large company, Kokosing remains a family organization into the third generation, constructing projects throughout the Midwest that are known for efficiency and attention to detail. That success relies on synergies created among its divisions and companies that allow it to handle projects as diverse as constructing multiple highway intersections or building a signature bridge on schedule and on budget.

"The Kokosing way of business is trying to be the best at everything we do," says Brian Burgett, president and son of founder William Burgett, who started the business in 1951. Those efforts extend to activities such as safety, quality, treatment of employees and customers, and the ways Kokosing uses and maintains equipment. "Our challenge is to be the best. We take on projects other companies look at and say, 'How can you get that done?'"

The Westerville, Ohio–based firm walks the walk on that philosophy. Bridge architect and engineer Fred Gottemoeller of Bridgescape LLC, who has worked with Kokosing through projects undertaken with engineering firm Burgess and Niple, has seen it in action. On the Rich Street Bridge in Columbus, Ohio, Gottemoeller says the firm was called on to construct some unusual designs.

"They did a careful job of figuring out how to give us what we wanted while still doing it profitably," he says. "It was very impressive. A lot of contractors would have thrown up their hands and

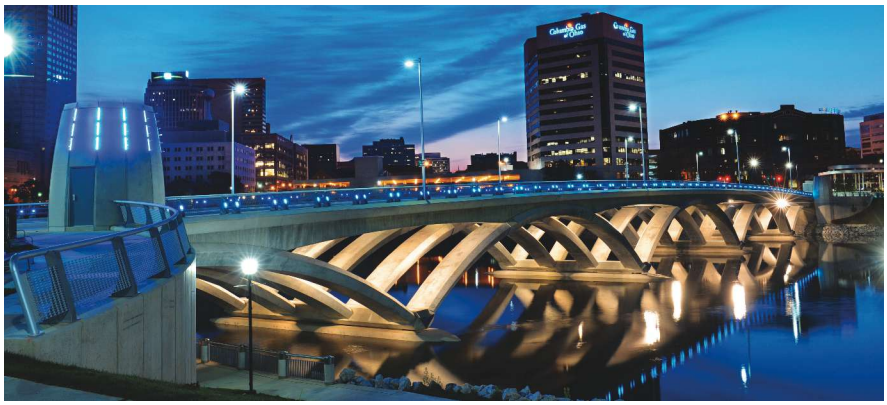

The Rich Street Bridge in Columbus, Ohio, was designed as a site to hold celebratory festivals as well as connect a historic neighborhood to the downtown area. Photo: Kokosing.

said they couldn't do it, or they would have just fudged it and done it poorly. But Kokosing plunged right in and did it well even though it took extra effort."

"Going the extra mile is our signature," says Lori Gillett, a third-generation owner and business development manager for Kokosing Industrial. "Kokosing employees love to take on new challenges," she says. "We're a turnkey company. We can do everything from move a mountain to build a stadium. We can do it all."

Divisions Work Together

That capability derives in large part from the company's multiple companies, which cover many market sectors, including industrial, highway, and marine. The company recently combined its Industrial, Marine, and Treatment divisions into Kokosing Industrial to better target those markets, says Burgett.

The synergies created among its Highway and Equipment divisions also ensure smooth access to resources. "Our ability to self-perform the vast majority of the work on our projects is very important to our clients," says Tom Muraski, senior vice president of Kokosing Industrial. "It gives us control over safety, quality, and scheduling."

Bridge projects arise both as a target of the Bridge Group as well as a component of its Highway projects, explains Tom Graf, manager of the bridge estimators and builders. "We are involved in projects coming in from all sources, and I may be the lead or just one part supporting someone else. And that work is seamless between groups. We are one happy family working within one budget. Self-performing our work is a huge part of our success."

'Employees feel like they're part of a family, even as large as we are.'

That synergy is aided by the company's family-oriented environment. "Our turnover is about 1.5%," Burgett says. "Employees feel like they're part of a family, even as large as we are. They like to feel like they're part of something bigger than them."

The Jeremiah Morrow Bridge is the tallest bridge in Ohio at 239 ft above the valley floor, and the first cast-in-place, concrete segmental box-girder structure owned by the Ohio Department of Transportation. Photo: OmniPro Services.

Equipment Needs Grow

Owning equipment and adapting it to each project's needs create efficiencies that improve constructability. That was apparent on the Jeremiah Morrow Bridge in Warren County, Ohio, which consisted of twin 2252-ft, six-span bridges comprising post-tensioned, single-cell, cast-in-place concrete segmental box girders. The variable-depth girders were cast using form travelers.

"The segmental industry has a plethora of specialized equipment that is expanding the ways bridges can be built," says Graf. "We always use whatever equipment and materials will work best." In this case, Kokosing had seen form travelers in a presentation at an American Segmental Bridge Institute convention. The company bought the travelers and had them modified for the project to fit the beam depths, widths, and loadings required.

"It's definitely a specialized piece of equipment, and we hope we'll have the opportunity to use it again," Graf says. "That said, if someone comes to us with a need, we're definitely willing to talk with them about purchasing it and finding other equipment when we need it in the future."

Kokosing's expertise with heavy equipment and new designs aids its use of concrete in many applications. "Cranes are bigger today, so precast concrete pieces can be larger and heavier, from foundations through superstructures," he says. "Mass haulers' capacities also are significantly higher than 30 years ago. The amount of specialized heavy equipment out there is larger."

The firm also taps into its Marine division to provide waterway access when building bridges, although it seldom needs to transport materials to sites by barge. "Those are fun jobs when we can work from the water to construct them," he says.

Signature Bridges Stand Out

The Bridge Group's people thoroughly enjoy opportunities to create signature bridges, which it has been called

The 2252-ft-long, twin six-span structures of the Jeremiah Morrow Bridge in Warren County, Ohio, feature post-tensioned, single-cell box girders. The existing steel truss bridge will be removed now that the two concrete spans are complete. Photo: OmniPro Services.

upon to do on a number of occasions. "There's nothing wrong with large $200 million highway projects with a few bridges," Graf notes. "But the signature bridges are really exciting to build. I love that kind of stuff. They're definitely our favorites."

One such signature bridge was the Rich Street Bridge in Columbus, Ohio, a 568-ft-long precast post-tensioned concrete rib arch with reinforced concrete piers and abutments. The ribbon-arch design used three-dimensional modeling and additional loading to serve as the center for community festivals year round. It was designed to be a transitional art piece, connecting a historic neighborhood with downtown.

The singular success of the design, says Gottemoeller, came in its need to reflect the shape of the Main Street Bridge farther downriver. That three-span, inclined-arch bridge used trapezoidal steel vehicular boxes, the first of its kind in the United States. The construction team for the Rich Street Bridge was tasked with creating a complementary design with only half the budget (about $14 million).

Kokosing's precast concrete supplier fabricated steel forms that replicate symmetrical arches, with 68 pieces cast using only three forms. Concrete closure placements were not difficult, but they were complicated to achieve. Kokosing created forms that made the arches precisely, Gottemoeller says. "That was unusual to get exactly what we hoped for in a situation like this."

"We had very interesting conversations with Fred on the need for complementary designs even though the Rich Street and Main Street bridges were different materials and designs," says Graf. "We were very aware that the two had to work together aesthetically and that attention had to be paid to all the details to meet that goal, even though our budget was much smaller."

Aesthetic design also played a major role in the company's work on the High-Main Street Bridge over the Great Miami River in Hamilton, Ohio. The five-span bridge features deeply haunched, spliced precast concrete girders that produce a Neo-Baroque appearance emulating Hamilton's adjacent War Memorial building. The bridge replaced a narrower 1915 structure and provides wide sidewalks and sweeping views of the river.

Contractors followed guidelines created by the Ohio Department of Transportation, the City of Hamilton, and the Ohio State Historic Preservation Office in compliance with the National Historic Preservation Act for the construction of the High-Main Street Bridge over the Great Miami River. Photo: Kokosing.

"The precast concrete fascia was more complex due to the sidewalks and the overlooks, which turned out very well," says Gottemoeller, who worked on the design. "Kokosing essentially said, 'If that is what you want, we'll give it to you.'" The detailed railings were designed to fit the historical style but also serve as crash protection, requiring more elaborate structural connections. "It took time to get it right, but they did a great job on it."

More Design-Build, P3

Kokosing's attention to detail and complexity works well with the trend toward design-build and private-public partnership (P3) delivery methods. The company is becoming involved in more of those projects. "There's no question that design-build has gained a foothold," says Graf. "The Ohio Department of Transportation is getting more comfortable with that delivery method and is doing bigger projects using it."

So many projects are being done in those formats that Kokosing has a manager devoted strictly to handling alternative-delivery projects. The signature bridges still remain design-bid-build projects, he notes. "It's difficult to do those projects with more complex architecture in other formats. By the time the department of transportation has finished the scope and plans, they're typically 90% designed already."

Kokosing has been involved in a variety of P3 projects, which are typically delivered via design-build methods. "P3 can involve many types of programs, with only some of them including operations and maintenance

To create a Neo-Baroque appearance for the High-Main Street Bridge, Kokosing paid close attention to details such as the lookouts along the sides. Photo: Kokosing.

components," he points out. "The P3 market has a variety of markets and needs." Construction manager/general contractor delivery hasn't come to the fore yet, he adds, as those are typically driven by private owners. "In Ohio, it's somewhat of a novelty at this point, whereas design-build is here to stay."

Concrete Advances

Design-build projects allow Kokosing to maximize its knowledge and talents, giving the firm incentives to stay abreast of concrete developments. "There are new mixtures coming out all the time," Graf says. "It used to be that 9 ksi concrete was out of reach, but we see 7 ksi all the time now and high-performance mixes are everywhere. The 3.6 ksi mix is long gone. The game has really changed. Concrete used to be a simple product, but now it's highly engineered with chemicals to add special benefits of durability or retardation or other amazing things."

High-performance concrete of all types is growing in use, he notes. "We see a lot of high-performance mixes, and each one is different. 'High performance' can mean many things, because it can be used to create almost anything desired. It's a huge topic today on many of our projects."

The 5th Street bridge-replacement project in Montgomery County, Ohio, featured self-consolidating concrete for the decorative concrete parapets to create details that offered a high-quality finish. Approximately 6250 yd^3 of structural concrete were used in the 5th Street bridge-replacement project's pilings, beams, decorative pier ends, and other components. Photo: Kokosing.

Kokosing took advantage of those capabilities on the 5th Street bridge-replacement project in Montgomery County, Ohio, a $6.7 million design for a five-span bridge. It featured 9000 linear ft of reinforced concrete piling, prestressed concrete interior beams, precast concrete post-tensioned exterior beams, decorative pier ends, and decorative parapets. The latter were produced with self-consolidating concrete (SCC).

"SCC is a wonderful product," says Graf. "It flows so well to fit into tight areas and creates intricate shapes, and it looks great when it sets, with a very smooth finish, which reduces rubbing and patching needs. It's a specialty product due to its fluidity and forming needs, but when it's needed, it's a great product."

Kokosing often uses concrete girders in "the sweet spot" of 120- to 160-ft lengths, he notes. "Precast concrete beams are efficient in those lengths and help minimize substructure components. It's getting to the point that any lengths of concrete beams can be created to compete with steel assemblies, and we've seen some of 200 ft. But that 120-to-160-ft length is very efficient for girders and substructures."

New concrete designs also are helping achieve the longer service lives that owners are seeking. The Jeremiah Morrow Bridge was designed with a 100-year service life, with such attributes as more redundancy in strand protection. Kokosing often performs life-cycle cost analysis during its value-engineering reviews to determine what will best help achieve longer life with designs.

As bridge design and construction approaches change, Kokosing will continue to evolve to ensure that its work offers efficient, cost-effective construction. "It's our legacy that our employees work hard," says Gillett. "We're passionate about our work. We do things right the first time. We're hands-on builders."

Three Generations of Owners

William "Bill" Boyd Burgett founded Kokosing Construction in 1951 as William Burgett Builder and Concrete Work after working with a number of construction companies in Ohio. It became Kokosing after he created a working relationship with the first employee, Lester Rinehart. (The name comes from the river near the original headquarters in Fredericktown, Ohio. The Native American word means "wise owl," reflected in the logo's representation of a K fashioned to look like an owl's eye.)

Headquartered in Westerville, Ohio, Kokosing is one of the largest family-owned construction companies in the Midwest. Its primary business lines include industrial, transportation, buildings, pipelines, environmental, and marine work, and it also owns construction material-supply companies. The firm generates more than $1 billion in annual revenue.

EDITOR'S NOTE

The Jeremiah Morrow Bridge was featured in the Winter 2014 issue, the Rich Street Bridge was featured in the Fall 2012 issue, the High-Main Hamilton Bridge was featured in the Fall 2007 issue of ASPIRE.™ *Other Kokosing projects were also featured in profile articles for I-69 Twin Bridges over the Patoka River (Spring 2013) and Fulton Road Replacement (Spring 2009).*

Introducing New Ideas to an Aging Bridge Inventory

Implementing best practices to extend and maximize service life

Rex L. Pearce

by Rex L. Pearce, Virginia Department of Transportation

A sustainable, effective response to an aging bridge inventory is one of the greatest challenges facing departments of transportation today. Paramount are the Interstate corridors—crucial to travel, commerce, and defense—which rely on bridges that have reached their design life. Absent the fiscal resources to support a replacement program of this magnitude, bridge maintenance, preservation, and service-life extension are critical.

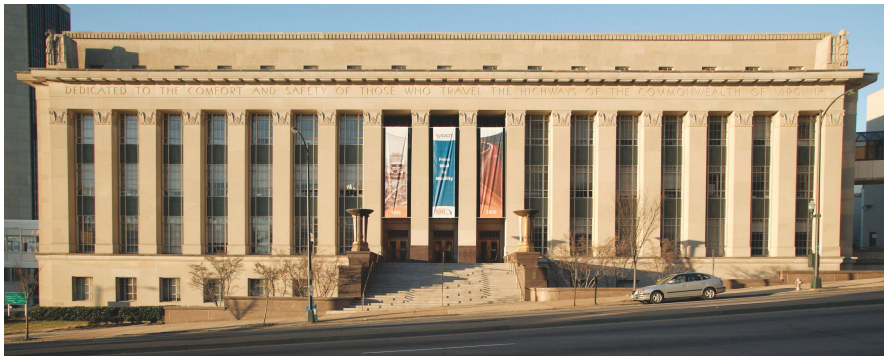

Virginia Department of Transportation Building in Richmond, Virginia. All Photos: Virginia Department of Transportation Staunton District Bridge Section.

The Virginia Department of Transportation maintains 21,000 bridges and large culverts throughout nine regional districts.

The Staunton District Bridge Section is responsible for 3500 structures: approximately 2200 bridges (45% concrete) and 1300 culverts (85% concrete). Building on a history of innovation and preservation, nearly 95% of Staunton District's bridge inventory is not classified as structurally deficient.

Know Your Bridge Inventory

A current and comprehensive inventory assessment is the basis of an effective bridge maintenance program. With our good fortune of operating in a data-rich era, utilizing this valuable asset to the utmost is sound logic. Trends of structure aging, conditions, materials, techniques, successes—all are there to improve program maintenance and preservation efforts as well as future implementations. Asset query software developed in Staunton District affords extensive condition and element level evaluation.

A typical assessment is the recent Bridge Maintenance Study implemented for the three Interstate corridors within the Staunton District. This study produced a cost valuation of district Interstate bridges, latest condition trends by materials and components, and a prioritization of future maintenance efforts.

Bridge Deck Preservation

Overlays

A sound bridge deck is not only paramount to the safety of the traveling public, it is essential in minimizing deterioration to superstructure and substructure components. Staunton District administers several ongoing preventive-maintenance contracts: maintenance and repair, shotcrete and self-consolidating concrete (SCC), component sealing, bridge washing, and culvert lining.

In the 1980s, Interstate bridge decks began to exhibit deterioration due to chloride contamination. The district set out to overlay all Interstate corridor decks, which was accomplished by 2000. To offset the permeable concretes used in earlier eras that allowed greater chloride penetration, epoxy overlays were applied to sound decks; milling followed by latex-modified concrete rigid overlays restored the more weathered traveling surfaces. In the 1990s, silica-fume-concrete rigid overlays were added as a more cost-effective material. In the 2000s, Virginia bridge decks began to be constructed with low-permeability concretes, which are considered substantially more chloride resistant.

Jointless Bridges

In the 1970s, Staunton District began using continuity as the preference

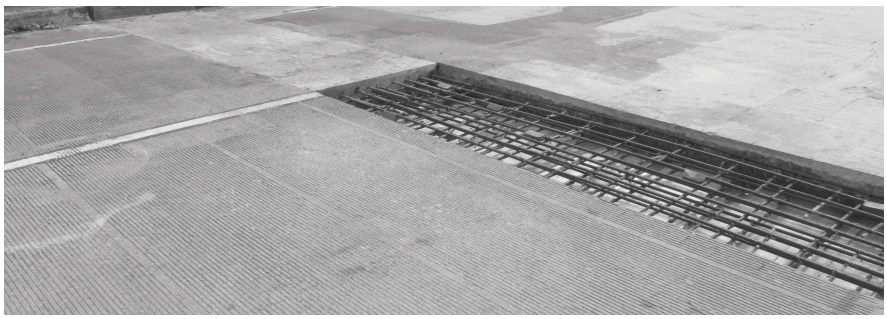

Elimination of bridge deck expansion joint with closure placement.

to simple spans for improved design efficiency and the added reward of joint elimination at the piers. In the 1980s, integral bridge construction was added. In the early 1990s, Staunton District began closing (eliminating) bridge deck joints on existing bridges. Deck extensions and semi-integral abutments followed closely thereafter.

Contemporary Deck Preservation

Twenty-five years have passed since the earliest Staunton District Interstate bridge deck sealing. Ongoing chloride contamination, aging, cracking, and subsequent patching have necessitated a new generation of deck-preservation technology. Hydro-milling is becoming more of a standard practice in this arena.

Unlike standard mechanical milling operations, which proceed with a fixed depth of removal and must remain above reinforcement, hydro-milling dials in a targeted soundness, reaching below reinforcement where necessary to remove chloride-laden concretes. The result is a stable, deeply roughened concrete matrix extremely well suited to overlay.

Implementing a district-wide bridge deck preservation strategy using this technique, two Interstate bridges were recently restored. Preservation efforts included bearing reconfiguration to accommodate joint closures, deck extensions, hydro-milling, and overlay replacement for a comprehensive jointless solution. Extensive preservation of piers and abutments was previously accomplished.

Intended as a comparative basis of various closure and overlay concrete materials, with the assistance of the Virginia Transportation Research Council, these 575-ft-long bridges received several preservation solutions.

Bridge deck prepared for overlay by hydro-milling.

Preserved interstate bridge.

Joints were replaced with closure placements using innovative concretes. These included rapid-set latex-modified concrete (RSLMC), fiber-reinforced concrete (FRC), engineered cementitious composite concrete with polyvinyl alcohol fibers, FRC with monofilament polypropylene fibers, and FRC with steel fibers. Concrete overlay mixtures included RSLMC, silica fume (SF) concrete, SF concrete with shrinkage-reducing admixture, SF concrete with coarse lightweight aggregate, and SF concrete with fine lightweight aggregate. Comparative performance will be used in coming years as a basis for material selections.

Superstructure and Substructure Preservation

SCC and shotcrete are a mainstay to substructure and superstructure restoration. Sealant application to beam ends, piers, and abutments extends this preservation. Carbon-fiber wraps applied to concrete beams damaged from vehicular strikes restore lost capacity. Chloride extraction and cathodic protection are explored where practicable.

Nondestructive Evaluation Technologies

Nondestructive evaluation (NDE) of bridge elements is an evolving technology and is becoming competitive with standard investigations. Future generations of engineers and inspectors will be more attuned to the visual and audible digital assessments of bridge conditions. This technology is expected to further supplement chain dragging to find voids, petrographic analysis to assess integrity, and possibly concrete coring to evaluate chloride contamination or presence of alkaline-silica reaction. A recent in-depth investigation of the decks on the 15 most active Interstate bridges within Staunton District is being used as a comparison of various NDE technologies. Of interest are impact echo, infrared, and three-dimensional radar examinations. Advantages include high-speed inspections to assist in a program-level condition update. NDE may further merge inspections with the bridge-health-monitoring arena.

Conclusion

Participation in a professional forum invites the very human tendency to showcase the more spectacular accomplishments of our experience. However, it is the vast inventory of the routine—workhorse bridges and small crossings, the aging and the problematic—that represents the majority of our duties as guardians of the transportation infrastructure. Often the most noteworthy accomplishments look simply like the photo located at the top of the page.

As such, it is only through achieving excellence in best management practices of existing inventories that we can strive for the exceptional.

EDITOR'S NOTE

See the Concrete Bridge Technology article by Dr. Maher Tadros in this issue for more discussion of strategies for eliminating joints in bridge decks.

LENTON
REINFORCING STEEL CONNECTORS

Millions of LENTON reinforcing steel connectors have been used in the most demanding projects worldwide. As a pioneer in the construction industry, LENTON products are world renowned for Quality, Reliability and Performance. And, LENTON products meet or exceed worldwide code compliance requirements.

LENTON – the brand to trust.

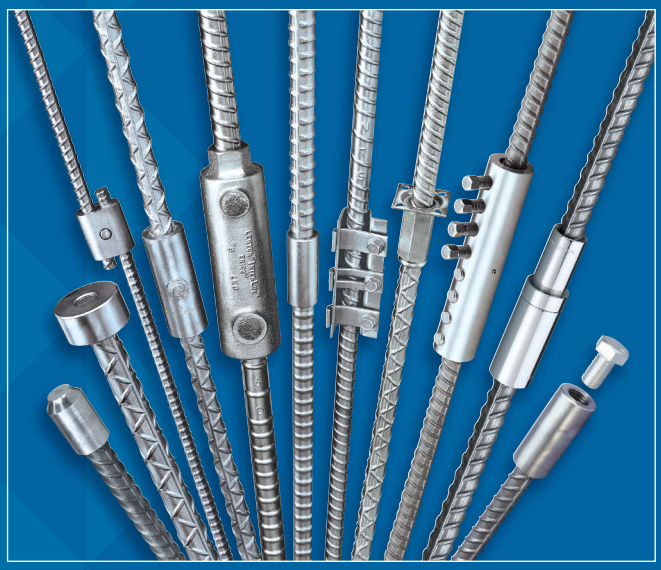

LENTON provides confidence in reinforcing steel connections.

PENTAIR

www.erico.pentair.com

PROJECT

Rehabilitation and Seismic Retrofit of the North Torrey Pines Road Bridge

by Keith Gazaway, Nathan Johnson, and Mark Creveling, Kleinfelder Inc.

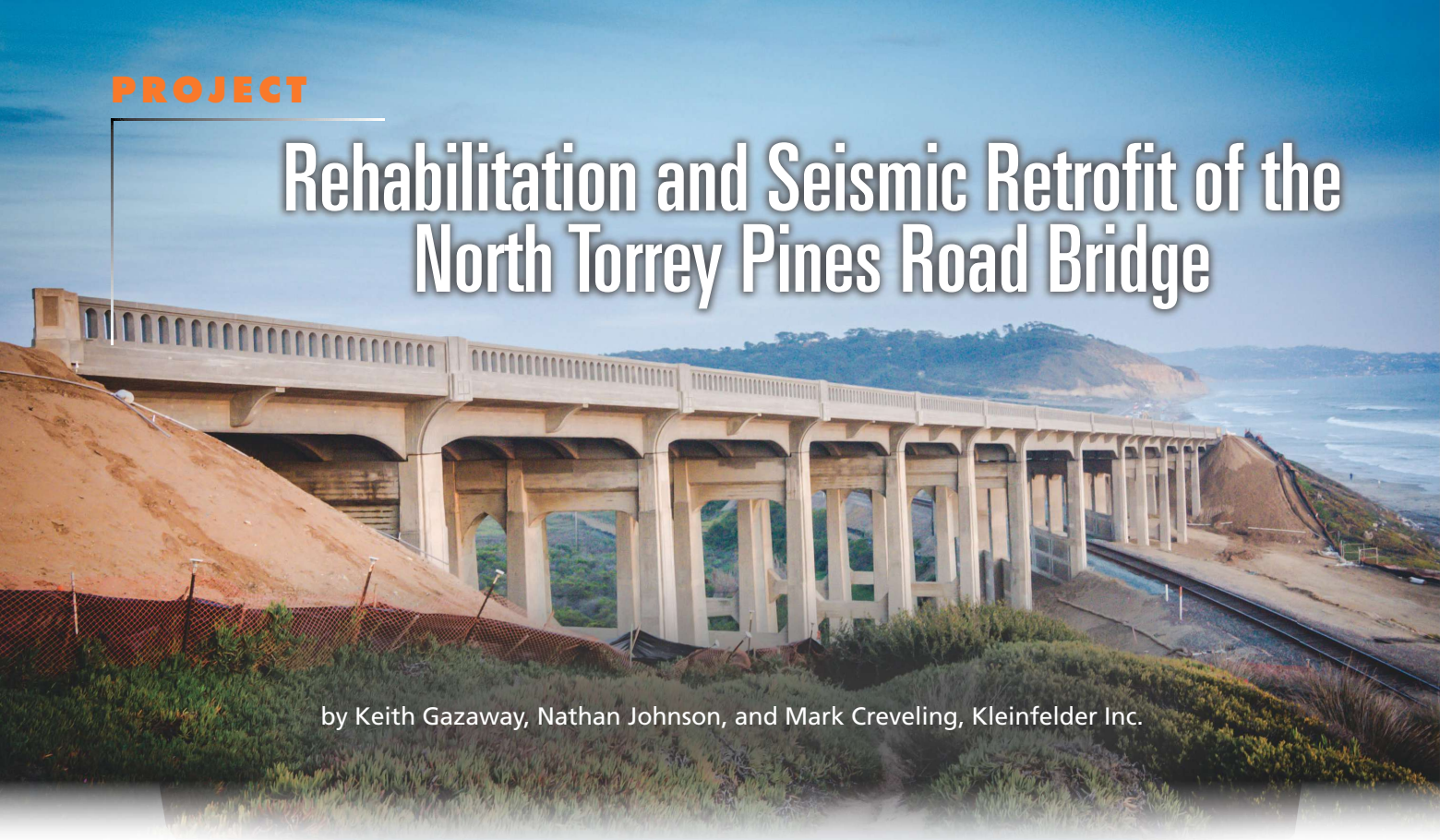

Bridge after construction. All Photos and Figures: Kleinfelder Inc.

Situated along the scenic coastline at the northern border of San Diego, Calif., the North Torrey Pines Road Bridge is a landmark structure valued by the local community of Del Mar for its historical significance and aesthetic appeal. Until recently, the iconic structure was slowly succumbing to corrosion and was highly susceptible to seismic damage. In 2000, the city of Del Mar bought the bridge for $1 from the city of San Diego when the two cities could not agree on whether to repair or replace the bridge. Now, the city of Del Mar, with help from the Federal Highway Administration (FHWA) and local transportation funding sources, has infused this 83-year-old landmark with new life and strength to maintain its beauty for at least 50 more years. It will remain one of the more significant historic examples of cast-in-place concrete bridges on the coast of California.

Apparent Deficiencies

The original 550-ft-long bridge superstructure consisted of 15 simply supported T beam concrete girder spans on multi-column bents ranging in height from 30 to 70 ft. Most of the bents are normal to the roadway, but where the bridge crosses over the active railroad at a 63-degree skew, complex geometry requires several bents to be conjoined, resulting in a stiff network of columns and railroad collision walls.

In the early 1990s, the California Department of Transportation (Caltrans) added the bridge to the statewide federally mandated seismic retrofit program, and subsequently identified it as structurally and seismically deficient and functionally obsolete. As of 2008 it had a bridge sufficiency rating of 19 out of 100, which was mostly attributed to severe and extensive corrosion throughout the superstructure and substructure due to the coastal environment.

Suffering from Corrosion

Although much corrosion damage was plainly visible, an exhaustive investigation and materials evaluation of the bridge was warranted including delamination surveys, material sampling and testing, nondestructive and destructive testing, and continuity testing. Corrosion of the superstructure

profile

NORTH TORREY PINES ROAD BRIDGE / DEL MAR, CALIFORNIA

BRIDGE DESIGN AND GEOTECHNICAL ENGINEER: Kleinfelder Inc., San Diego, Calif.

CONSTRUCTION MANAGER: T. Y. Lin International, San Diego, Calif.

PRIME CONTRACTOR: Flatiron West, San Marcos, Calif.

PRECASTER: Oldcastle Precast, Perris, Calif.—a PCI-certified producer

POST-TENSIONING CONTRACTOR: DYWIDAG-Systems International USA, Long Beach, Calif.

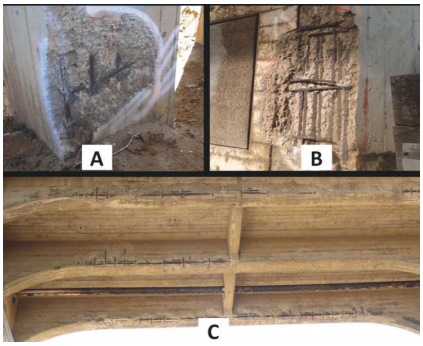

Corrosion on (a) column, (b) railroad collision wall, and (c) underside of girders.

was so severe that it was eventually agreed the best solution was to replace all of the girders.

Substructure corrosion was also extensive, although less severe than that of the superstructure. Cracked and delaminated concrete covered one-third of the substructure surface. The main source of corrosion was chloride intrusion, which is typical in a marine environment. Fortunately—despite the pervasive concrete damage due to corrosion throughout the substructure—most of the primary longitudinal reinforcement suffered minimal section loss even after 83 years in service in the marine environment and was able to be reused in the columns.

At Risk from Earthquakes

From 1999 through 2008, engineers performed several linear frequency domain analyses for the as-built bridge. All studies arrived at the conclusion that the bridge had several seismic vulnerabilities. As the retrofit studies progressed, and the scope began to focus on seismic retrofit rather than replacement, analytical methods became appropriately more refined.

Teams of structural and geotechnical engineers performed thorough seismic analyses using state-of-the-art methods including nonlinear pushover and time history analyses.

Geological layering beneath the bridge was highly variable. Therefore, to complete the seismic analysis, the bridge was broken into five geographic zones, each having a slightly different ground motion during the multiple-support nonlinear time history analysis. This investigation revealed several issues that would present safety risks during a major earthquake:

- Multiple lenses in soil beneath the structure with high potential for liquefaction
- Southern abutment susceptible to lateral spreading, possibly leading to bridge collapse
- Shear deficiencies in all columns and abutments
- Seat widths insufficient to prevent unseating of spans
- Large substructure displacements exceeding flexural ductility capacity
- Conjoined skew bents attracting seismic demands in excess of shear capacities of caps, columns, and joints

Installed column ties after removal of cover concrete.

Community Concept

The city of Del Mar conducted a study to compare a bridge replacement option (considering a variety of structure types) with retrofit and rehabilitation. The study indicated that it would cost slightly more to retrofit the bridge and extend its life by 50 years than to replace the bridge using new design standards. After extensive stakeholder meetings and public input, the consensus from the community was a strong desire to retrofit the much-loved, historic bridge despite the additional cost. During the environmental phase of the project, the city approved a plan to retrofit the bridge and preserve the

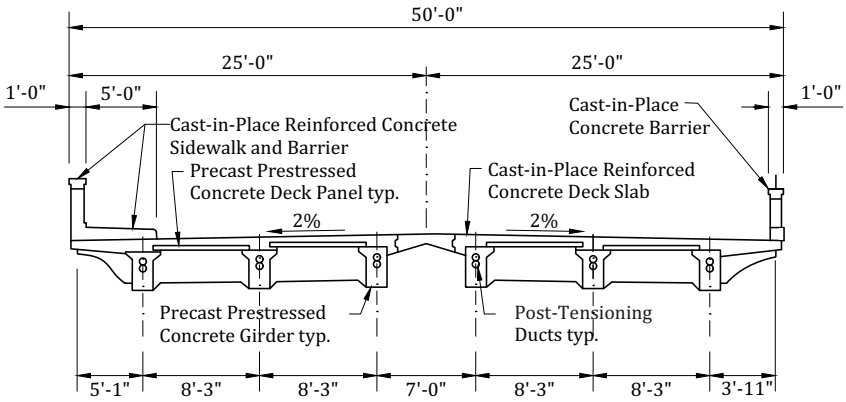

Typical section of new post-tensioned precast, prestressed concrete superstructure.

CITY OF DEL MAR, OWNER

BRIDGE DESCRIPTION: A 15-span, 550-ft-long, 50-ft-wide, cast-in-place reinforced concrete T-girder bridge, rehabilitated using a post-tensioned superstructure, consisting of precast, prestressed concrete girders, that replicates the previous structure.

STRUCTURAL COMPONENTS: 80 custom haunched precast, prestressed concrete girders varying in length from 15 to 57 ft; 282 precast, prestressed concrete deck panels with a 5-in.-thick cast-in-place deck; and repaired concrete columns

PROJECT CONSTRUCTION COST: $21 million

AWARDS: "Outstanding Environmental Solution," AEP San Diego, 2009; "Best Available Environmental Technology Award," NAEP, 2010; "Outstanding Project, Bridge," ASCE San Diego, 2013; "Project of the Year," APWA San Diego Imperial County, 2014; "Award of Excellence, Transportation $5-15M," CMAA San Diego, 2014; "Top 10 Bridges Award," *Roads & Bridges* magazine, 2014; "Outstanding Historical Renovation Project," ASCE Region 9, 2014; "Transportation Award," ACI San Diego, 2014; "Honor Award," ACEC California, 2015; "PCI Design Award, Best Rehabilitated Bridge," PCI, 2015; "California Best Project, Highway/Bridge," *ENR* California, 2015

Temporary bridge widening adjacent to environmentally sensitive area.

bridge's eligibility for listing on the National Register of Historic Places.

The city of Del Mar and its stakeholders stipulated that the railway corridor beneath the bridge, and the bridge itself, remain open to train, vehicle, pedestrian, and bicycle traffic during construction. Additionally, the construction work could not harm sensitive coastal habitat or species beneath the bridge.

The design team that performed the as-built condition evaluation and alternative analysis was also tasked with environmental and regulatory permitting, final design, and construction support. Due to the project complexity and high-profile designation, an esteemed peer-review team of experts was contracted to review the alternative selection and design.

Retrofit and Rehabilitation Strategy

The North Torrey Pines Road Bridge retrofit design criteria pushed well beyond typical structural and geotechnical methodology used for seismic design and retrofit of California bridges. A matrix was created to compare retrofit alternatives with project constraints. Several conventional and nonconventional retrofit methods were compared, including traditional substructure strengthening, complete isolation, and partial isolation with stiffness redistribution from select substructure elements. The selected retrofit and rehabilitation solution, while addressing environmental, historic, and usage constraints, was a unique concert of performance-based geotechnical and structural engineering design.

The major elements of the rehabilitation and retrofit strategy included

- soil densification using compaction grouting to mitigate liquefaction and lateral spreading;
- strengthening columns by removing cover concrete, adding shear reinforcement, and replacing concrete to its original dimensions;
- partial superstructure isolation with sliding bearings to protect stiff skewed bents;
- new deep foundation abutments to help restrain the partially isolated superstructure;
- end-to-end post-tensioning of the precast concrete superstructure to transmit lateral seismic force to select bents and the new abutments; and
- a corrosion protection plan using cathodic protection for elements that will remain in place.

Precast concrete girders were selected to maintain the railroad's required clearance envelope during construction. The precaster built multiple custom forms to replicate the existing girder dimensions, including end haunches, skews, and surface texture, and the precaster also created a three-dimensional virtual model of each girder to ensure the reinforcement and prestressing would fit perfectly within the forms.

Prior to post-tensioning, the pretensioned concrete girders were capable of carrying AASHTO HL-93 live loading; however, post-tensioning the girders provided continuity for lateral seismic loads and also increased the girders' vertical capacity to carry the weight of California's permit vehicles. While a cathodic protection system will protect the substructure elements, the partially isolated superstructure relies on epoxy-coated reinforcing steel, increased concrete cover, limited water-cement ratios, and concrete admixtures to resist chloride penetration and reinforcement corrosion.

Pacific Ocean in front of bridge during superstructure demolition.

Construction Stages

The retrofit of the North Torrey Pines Road Bridge began in December 2010. Since the bridge crosses over the second-busiest passenger rail corridor in the United States, construction crews had to work around schedules for passenger rail, commuter rail, and freight rail users. Items such as demolition, which required temporary closure of the rail corridor, needed to work around strictly scheduled weekend closure windows.

Pedestrian, bicycle, and vehicular traffic needed to be maintained during the approximate 2-year duration of construction. Therefore, the bridge was constructed in two phases, where traffic was shifted to one side, half was demolished and rehabilitated/retrofit; then traffic was shifted to the new portion, and the other side was demolished and rehabilitated/retrofit.

To allow for the two-lane bridge to remain open to two lanes during construction, the engineering and construction teams developed a temporary steel bridge structure that could be placed on one side of the bridge and moved to the other side in a subsequent stage. The temporary structure was braced laterally against the seismically deficient bridge, which required extensive analysis to ensure safety during construction.

The North Torrey Pines Road Bridge retrofit was completed by December 2013 on time, on budget, and to the satisfaction of the city of Del Mar, its stakeholders, and the community. The bridge is now stabilized against corrosion, structurally and seismically sound per the current bridge standards, and—most important—preserved with its historic character for future generations.

Keith Gazaway is a principal bridge engineer, Nathan Johnson is director of bridge engineering, and Mark Creveling is senior vice president of transportation for Kleinfelder Inc. in San Diego, Calif.

Precast concrete girders erected on rehabilitated substructure.

AESTHETICS COMMENTARY

by Frederick Gottemoeller

The North Torrey Pines Bridge is typical of its era, a time when owners were willing to build aesthetic details like recessed column corners and haunched T girders into their bridges in order to give them an aesthetic "personality" suitable for their locations, in this case along a beautiful seashore. The bridge reminds me of Conde McCullough's famous bridges along the Oregon coast, bridges also of the same era. No wonder it has retained the affection of its community for 83 years.

So it is heartening to see that the members of its community decided to spend a bit more than the cost of a new bridge in order to restore the old one. They recognized that aesthetics and historic preservation have a value and that they are worth spending money on to accomplish community goals. It is a rare attitude in today's climate of relentless cost cutting. This step is perhaps easier to take for a city that does not have to reconcile competing claims from across a state.

It is also heartening that the designers took a "both. . .and" approach to balancing aesthetic criteria and the undoubtedly difficult technical requirements of the seismic retrofit. Frequently, technical needs are given first priority, and aesthetic features made to fit into whatever space remains. In this case the designers kept working on technical solutions until they found ones that accomplished both the seismic requirements and the aesthetic criteria, at the same time. For years to come the citizens of Del Mar will bless them for their persistence.

PROJECT

SR 520 Evergreen Point Floating Bridge—East Approach Bridge

by Greg Banks, BergerABAM, and Dellas Clark, Kiewit-General-Mason

Opening ceremony of the new State Route 520 Evergreen Point Floating Bridge. The opening ceremony took place in April 2016. The East Approach Bridge starts at the near shore at the end of the asphalt pavement. The existing bridge is shown to the left of the new bridge. Photo: Washington State Department of Transportation.

Nestled between Seattle, Wash., and the nearby communities of Bellevue, Kirkland, and Redmond, is the nearly 50-mile-long, more than 1-mile-wide, majestic Lake Washington. Recent population growth in these communities has brought an increase in transportation demands on the corridors connecting them with Seattle. Washington State Route 520 (SR 520) serves as one of two corridors crossing over Lake Washington. Designed with only four traffic lanes, two in each direction, the nearly 50-year-old existing floating bridge is often clogged with heavy traffic. The aging infrastructure was also vulnerable to windstorms that required closure of the corridor due to waves crashing onto the roadway, and had seismically vulnerable approach spans that failed to satisfy current seismic design code standards.

Due to these deficiencies, the Washington State Department of Transportation decided to release a design-build contract to construct a new floating bridge across the lake. The new bridge would include an elevated roadway deck with two general-purpose lanes and one high-occupancy lane in each direction, plus full shoulders; a regional shared-use path; and means to accommodate high-capacity transit at a future date.

The new SR 520 Evergreen Point Floating Bridge is made up of a number of elevated bridge segments: the pontoon-supported low-rise and high-rise structures; single-span structures at each end of the pontoons providing transitions from the floating bridge segments to the land-based fixed segments; Pier 36 (two-column/shaft land-based fixed pier marking the west end of the contract); and the focal point of this article, the land-based, fixed, east approach bridge.

Comprising twin three-span, parabolic-arch shaped, cast-in-place concrete box-girder superstructures, one for westbound and one for eastbound traffic, the east approach bridge structures provide an elegant transition between the land-based fixed structures and the low-profile floating bridge structure. The overall length of the east approach bridge is 630 ft, with a cantilever span of approximately 110 ft, an interior span of approximately 320 ft, and an end span of approximately 200 ft. The 110-ft cantilever span supports the end of a 190-ft-long transition span structure whose other end is supported on the floating bridge. Together, the transition span and cantilever end of the east approach bridge create a nearly 300-ft span forming the lake's east navigation channel.

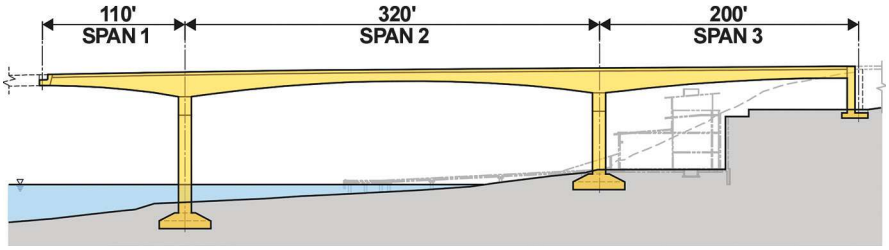

Schematic elevation of the State Route 520 Evergreen Point Floating Bridge East Approach Bridge. Drawing: BergerABAM.

profile

SR 520 EVERGREEN POINT FLOATING BRIDGE—EAST APPROACH BRIDGE / SEATTLE AND MEDINA, WASHINGTON

BRIDGE DESIGN ENGINEER: BergerABAM, Federal Way, Wash.

PRIME CONSULTANTS: KPFF and BergerABAM, partners as the prime engineering team, Seattle, Wash.

PRIME CONTRACTOR: Kiewit, General Construction, Manson Construction (KGM)—a joint venture, Federal Way, Wash.

POST-TENSIONING CONTRACTOR: Schwager Davis Inc., San Jose, Calif.

Aerial view of the State Route 520 Evergreen Point Floating Bridge East Approach Bridge during construction. The eastbound structure and the first frame of the westbound structure have been completed. Construction of the westbound Pier 1 cantilever is underway. Photo: KGM.

At nearly 90 ft and 60 ft wide, the westbound and eastbound structures, respectively, are each made up of two-cell box girders with section depths varying from 19 ft at the pier locations to 9 ft at midspan of the main span and ends of the end spans. The maximum cantilevered overhang reaches nearly 15 ft 4 in. and the maximum width of each cell of the box girder is approximately 29 ft. The eastbound structure had a truncated south overhang that was designed to allow for a 16 ft 4 in. deck widening on the south side of the bridge in the future. The webs, or vertical stems of the box girder, are 18 in. thick. The exterior webs are sloped at a maximum of 1.75:1 (vertical:horizontal). The top slab has a minimum thickness of 10 in. and the bottom slab varies from 4 ft at the pier locations to 9 in. thick at midspan.

The intermediate piers consist of single columns supported by a common spread footing. Except for height, all the columns are identical, being rectangular in section with dimensions of 24 ft long (parallel to the transverse axis of the bridge) by 10 ft wide (parallel to the longitudinal axis of the bridge). The columns are cellular, containing two cells, giving the column the appearance of a giant masonry block. Each wall of the columns is 18 in. thick. A massive 160-ft-long, 40-ft-wide, and 12-ft-thick common spread footing supports both westbound and eastbound structures at each pier. The spread footings were designed to remain elastic under the design earthquake considering the effects of out-of-phase motions of the two bridge structures.

The east approach bridge structures were constructed by balanced-cantilever methods using form travelers. Initially a pier table was constructed at the top of each column using conventional falsework to provide sufficient length to place form travelers on each end of the pier table. The form travelers supported the formwork and the weight of 16-ft segments of the bridge structure. The

Construction of the Pier 1 cellular columns. The massive spread footing is located in the coffercell below. The Pier 1 footing was constructed below the mudline and buried with aquatic habitat substrates. Photo: BergerABAM.

Form traveler used during construction of the superstructure by balanced cantilever methods. Photo: BergerABAM.

WASHINGTON STATE DEPARTMENT OF TRANSPORTATION, OWNER

OTHER MATERIAL SUPPLIERS: Bearings: Scougal Rubber Corp., Seattle, Wash.; and expansion joints: Mageba USA, San Jose, Calif.

BRIDGE DESCRIPTION: Twin 630-ft-long, three-span, post-tensioned, cast-in-place, segmental concrete box-girder bridges with spans including a 110-ft cantilever that supports a 190-ft-long transition span, a 320-ft-long main span, and a 200-ft-long end span

STRUCTURAL COMPONENTS: Spread footings, two-cell box columns, and thirty-two 16-ft-long cast-in-place concrete segments per bridge

bridge was then constructed in 16-ft segments at a time.

The balanced-cantilever construction method replaced the traditional cast-on-falsework methods shown in the owner-issued concept design. Using balanced-cantilever construction methods, falsework below the bridge was not needed as temporary support, and thus could be built without disturbing the shallow waters of the lake's shoreline, which provide a prime salmon spawning habitat. Notable environmental advantages included the following:

- Position of Pier 2: Pier 2 is the easternmost intermediate pier. The request for proposal (RFP) stated that Pier 2 was located partially within the wetted perimeter of Lake Washington. It was shifted upland, outside the wetted perimeter of Lake Washington. The modification preserved more than 800 ft^2 of shallow water habitat.
- Spread footings: The RFP utilized a series of drilled shafts tying into large pier caps that extended from the lake bed to the water surface. The use of spread footings reduced concrete volume by 12,500 yd^3, required smaller cofferdams, and protected a vital aquifer providing water to Lake Washington through upwelling. In addition, 95% of the permanent lake bed disturbance was eliminated by moving Pier 2 upland, and burying the Pier 1 spread footing with aquatic habitat substrates.
- No temporary falsework: Use of balanced cantilever methods eliminated the need for temporary falsework to construct the east approach bridge structures. It is estimated that the use of balanced cantilever methods reduced the amount of temporary shoring by 27,000 ft^2, eliminated 125 piles, and reduced the amount of prime salmon spawning habitat substrate disturbance by 525 ft^2.

The term *balanced cantilever* implies that bending moments and deflections of supporting piers are balanced, or nearly balanced, at any point during construction. However, depending on the specific configuration of the bridge, the sequence of erection, and the function of the bridge, the pier may not ever be exactly balanced during construction. Bridges built by balanced cantilever methods can be significantly unbalanced either during construction or after the bridge is put into service. If potential unbalanced moments in the pier exceed pier allowable bending moment capacities or cause excessive pier deflections, measures must be taken to maintain the balance to the extent necessary. Such was the case with the east approach bridge structures, which needed to accommodate large reaction forces from the transition span applied to the tip of the cantilever span in a service condition.

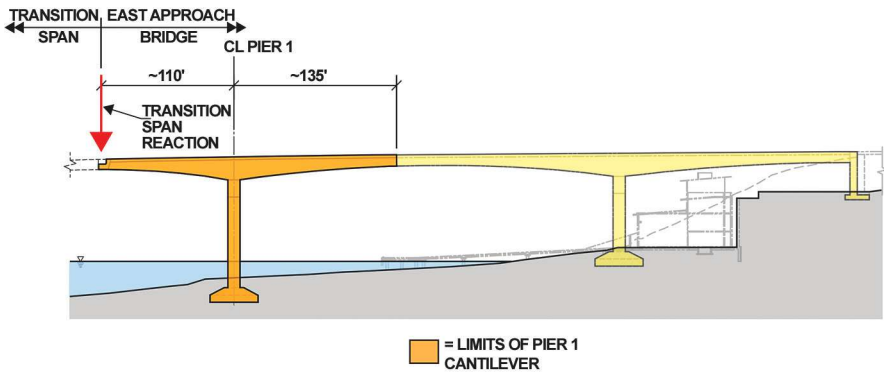

Schematic of Pier 1 cantilever. The east heading was approximately 25 ft longer than the west heading to offset the permanent out of balance demands from the transition span reaction. Drawing: BergerABAM.

The transition span reactions generate large bending moments within the superstructure, and also large bending moments within the pier columns. To help offset this issue within the substructure elements, the Pier 1 balanced cantilever construction underwent an unbalanced condition opposite of the permanent transition span reaction. The interior span side of the cantilever was constructed about 25 ft longer than that on the opposite side (that is, the cantilever side) of the pier. This temporary unbalanced situation generated construction challenges requiring counterweights—in this case, tanks filled with lake water—to keep stresses in the structure to within allowable limits, and also aid in the alignment of the closure between pier cantilevers at the middle of the interior span. The Pier 1 cantilever construction required careful geometric control during construction. As part of the construction engineering, the pier displacements were field monitored at each construction stage and compared with the estimated values. Model inputs were continually adjusted to predict the required counterweight and necessary form adjustments.

A new superstructure segment was cast every 3 days. The form traveler could not be advanced until the cast segment was post-tensioned. Further, the segment could not be post-tensioned until the concrete had gained sufficient compressive strength. A high-early-strength, 5 ksi concrete was used so that approximately 16 hours after casting the segment could be post-tensioned and anchored to the far end of the cantilever on the opposing heading.

Post-Tensioning

Post-tensioning was provided transversely, longitudinally, and vertically in the east approach bridge structures. Tendons in the longitudinal direction typically consisted of either nineteen or twenty-two 0.6-in.-diameter strands per tendon, with the largest tendons containing twenty-seven 0.6-in.-diameter strands per tendon, passing through either the top or bottom slab. Cantilever tendons in the top slab run from end to end of the cantilever, and were used during construction to stress the newly constructed segment back onto the completed bridge segments. Bottom-slab tendons (or continuity tendons) in the middle span regions were stressed after the structure was closed or partially closed. Longitudinal post-tensioning was designed to avoid tension in sections under service loads throughout the design life of the structures.

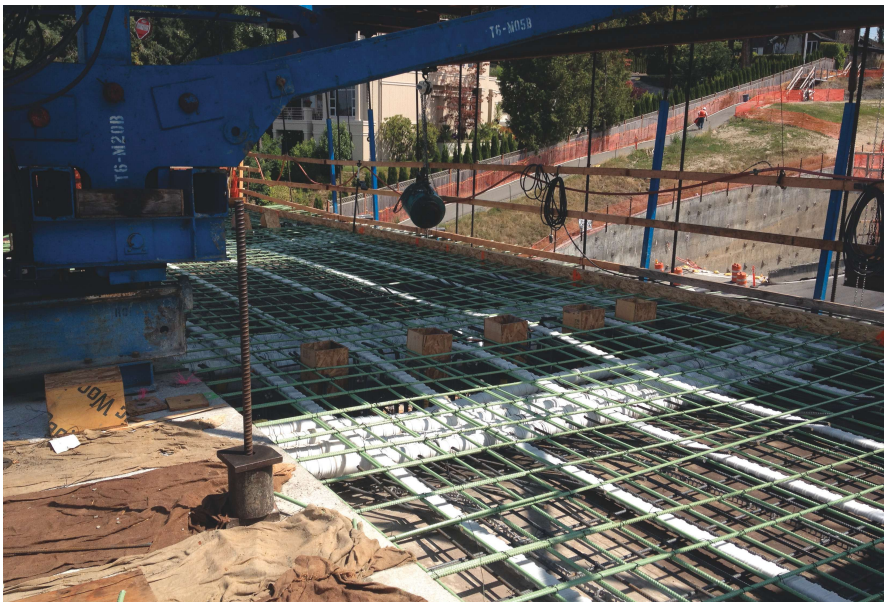

Typical top slab reinforcement and duct layout within a segment. Photo: BergerABAM.

Post-tensioning in the transverse direction consisted of four 0.6-in.-diameter strands per tendon passing through the top slab and anchored at the ends of the bridge deck overhangs. Due to the thin top slab, flat ducts were used for these tendons. Typical longitudinal spacing of transverse tendons was approximately 3 ft. To maximize the tendon efficiency, the tendons were placed near the top surface over webs and draped to near the bottom surface in the mid-cell location of the top slab.

Vertical post-tensioning was provided via 1⅜-in.-diameter, high-strength rods in each web of the box girder where needed to keep the principal tensile stresses within acceptable limits. The east approach bridge utilized epoxy-coated reinforcing steel for the top mat of reinforcing steel in the top slab of the box girder.

Now Open

Construction of the SR 520 Evergreen Point Floating Bridge project was successfully completed and traffic was shifted onto the bridge in April 2016.

Greg Banks is a bridge project manager and construction liaison engineer in the Federal Way, Wash., office of BergerABAM. Dellas Clark is a construction superintendent with Kiewit-General-Mason in Bellevue, Wash.

EDITOR'S NOTE

The low-rise superstructure of the SR 520 Evergreen Point Floating was featured in the Spring 2016 issue of ASPIRE.™

Precast Concrete Segmental Substructures

by Brenda Nichols, Cianbro Corp.

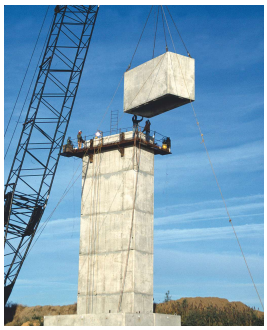

Left: Chesapeake & Delaware Canal Bridge precast concrete column erection, 1995. Photo: American Segmental Bridge Institute (ASBI). Middle: Entire column ready to be erected at the South Norfolk Jordan Bridge. Photo: FIGG. Right: O'Callaghan-Tillman Memorial Bridge precast concrete. Photo: ASBI.

Bridges utilizing precast concrete segmental substructures have been built in the United States since the 1970s, but they are not nearly as common as bridges with segmental superstructures. This article describes the use of precast concrete segmental columns, explores their benefits, and establishes reasons why a contractor in particular might choose this construction method.

What Are Precast Concrete Segmental Substructures?

Examples of precast concrete segmental substructures can include footings and pier caps, but this article will focus on the classic segmental model of precast concrete column units that are stacked on top of each other and then made continuous with vertical post-tensioning. The column segments can be simple rectangular shapes, such as those used on the Chesapeake & Delaware Canal Bridge, the South Norfolk Jordan Bridge, and the O'Callaghan-Tillman Memorial Bridge. Alternatively, the segments can consist of a more-complex shape, chosen for aesthetic or other project-specific reasons. Some examples of these types of column segments can be seen in the Sunshine Skyway Bridge and the Linn Cove Viaduct. In general, the shape of the column segments is a balance among the structural requirements of the design, the aesthetic goals of the owner, and the weight limits of the contractor's transportation and erection equipment.

Benefits

The benefits of using a precast concrete substructure are similar to the benefits achieved from using a precast concrete superstructure. Speed of erection of precast versus cast-in-place

Installing a pre-tied reinforcement cage into the column segment form for the Sarah Mildred Long Bridge. Photo: Cianbro.

Finishing a column segment for the Sarah Mildred Long Bridge is a simple operation because most surfaces are formed. Photo: Cianbro.

concrete is the most obvious benefit. Precasting the column segments means that forming, installing reinforcement, placing concrete, and curing all take place off the critical path. The column segments can then be transported to the jobsite when needed and quickly stacked in place. The speed of erection is only limited by how fast the rigging can be installed, the access can be established, and the crane can swing. With good field planning for the operation, entire columns can be built in 1 day. This can be a critical factor on a project with a short construction season (such as a bridge located in a harsh climate, or in an area with severe environmental restrictions), but precasting concrete in a precast yard can often occur year round. If the bridge is over water, reducing the time spent working over water could potentially reduce insurance costs for the project as well.

Another benefit is the reduced impact to the traveling public, if the bridge is located near public roadways or railways. A cast-in-place concrete operation requires a much longer time for the contractor to occupy each column site to allow for the forming/stripping crew, reinforcement crew, and concrete finishers to do their work, along with required curing time. In addition, materials such as formwork and reinforcement must be delivered, and timely access must be provided for the pump truck and ready-mix concrete trucks on concrete-placement days.

Another benefit of using precast concrete substructure is the quality and durability of the finished product. Concrete structures produced in a casting yard, as opposed to placed in the field, are generally recognized to be higher-quality structures. The repetitive nature of precasting eliminates the surprises and disruptions that can lower the quality of field-placed concrete. Use of high-performance concrete, consistent application of controlled steam or heat curing, and the ability to achieve reliable concrete cover are all hallmarks of a good precasting operation, and all improve the durability of the finished structure.

Finally, improved safety for construction workers is another benefit of using a precast concrete substructure. Precast yards are typically established away from heavy traffic areas, so work crews and suppliers making deliveries are not exposed to traffic zone dangers, as they might be at the actual bridge site. Additionally, casting beds for column segments are typically only two segments high, and are built in a stationary location so that proper access and work platforms can be installed. This eliminates most work that would occur high off the ground for a tall cast-in-place concrete column, which in turn greatly reduces the hazards of the crew falling or of being struck by falling objects.

Segment Casting and Erection

Column segments are typically match-cast in their actual vertical orientation to ensure a precise fit during erection. The bottom segments are cast first, then casting proceeds upwards. For survey control, the segments are located with respect to plumb control lines—note that two orthogonal faces must be monitored to ensure that the column will be plumb in both directions.

The reinforcing cages, which include reinforcement, post-tensioning ducts, and any necessary embedded items, are usually pre-tied for maximum efficiency during the casting process. After forms for the new segment are set and surveyed on top of the previous match-cast segment, the reinforcing cage is set into the forms. Keyway block-outs in the top surface and mandrels to hold the post-tensioning ducts in place are attached to the forms to ensure their correct position throughout the concrete placement.

After the concrete is placed and finished, the segment is cured overnight and typically achieves strength for stripping by the following morning.

Column segment erection is fairly simple. The footing is usually prepared with a keyway slightly larger than the column cross section. The first segment is set partially into the keyway, then surveyed plumb and shimmed off the bottom to achieve the desired accuracy.

Preparing to strip forms for a column segment for the Sarah Mildred Long Bridge. Photo: Cianbro.

Completed tower column segment for the Sarah Mildred Long Bridge. Photo: Cianbro.

The level of accuracy required for this operation is a function of the height of the column, because any error in setting the initial segment will be projected to the top of the column. After the segment is shimmed, post-tensioning ducts between the footing and segment are coupled, and high-strength grout is placed into the keyway to join the segment to the footing.

After curing the grouted joint, erection of the remainder of the segments can proceed. The segments are joined by placing epoxy on the top of the last segment just prior to setting the next segment. Each segment is simply set atop the previous one, since geometry has already been established in the precasting operation. The segments are placed until either the contact time for the epoxy is approaching the specified limit, or the stacked column reaches the limit of stability. At this time vertical post-tensioning is applied to the column to achieve either the minimum epoxy squeeze pressure or the minimum stress required for stability, whichever is greater. Note that for shorter columns, no intermediate stressing may be required. The final segment to be erected is the pier cap segment, which typically has a solid section and special reinforcement to accommodate the bearings and distribute the superstructure and post-tensioning forces to the overall column cross section.

After all of the segments in a column are erected, the permanent vertical post-tensioning is installed and stressed. These tendons loop down through the footing and have both anchorages located in the pier cap segment. All stressing operations take place from the top, with the tendons double-end stressed from the pier cap.

Case Study—Sarah Mildred Long Bridge Lift Towers

The Sarah Mildred Long Bridge is a two-level precast concrete segmental box-girder bridge connecting Kittery, Maine, to Portsmouth, N.H., across the Piscataqua River. When it opens in 2017, it will carry vehicular traffic on its upper deck and a rail line on its lower deck. The new bridge will have a 300-ft-long movable lift span over the river navigation channel, supported by four 194-ft-tall concrete lift towers. The contract delivery method for this project is construction manager/general contractor (CM/GC).

The four lift towers were originally designed to be cast-in-place, but during the CM/GC process it became clear that switching to precast concrete would reduce both cost and schedule. The contractor estimated that it would take 4 months per tower to cast them in place, and because it was on the critical path, they would have to work on at least two towers simultaneously. The two foundations for the towers would also need to be constructed simultaneously to meet the project schedule. With the switch to precast concrete, the tower erection was compressed to 5 weeks at each location, which allowed one foundation to be constructed at a time, reducing the amount of temporary works. The savings in cost and schedule at the time of the estimate was projected to be significant.

The 88 lift tower segments (22 per tower) are essentially rectangular hollow sections with outside dimensions of 19 ft by 27.5 ft by 8 ft tall, with a minimum wall thickness of 1.5 ft. They contain 50 yd^3 of concrete each, for a total weight of approximately 101 tons per segment. The total vertical post-tensioning force on each tower when complete will be approximately 4000 tons.

Closing Remarks

There are several cases where utilizing precast concrete segmental substructures instead of cast-in-place concrete on a bridge project could be beneficial to a contractor. It could be an economic solution on a project with extensive repetition of common piers, and where site preparations or time-consuming deep foundations provide lead time for the precasting operation, such as the Sarah Mildred Long project. It could be the best solution on a project with unique (yet repetitive) column shapes that require high-quality concrete or geometry control,

Moving a completed column segment for the Sarah Mildred Long Bridge to storage. Photo: Cianbro.

Sarah Mildred Long Bridge lift tower column segments in storage. Photo: Cianbro.

or extreme durability. Finally, it could be the best construction plan for a project where site access is severely limited by either time or space constraints. In all of these cases, where a bridge project has been designed with cast-in-place substructure columns, there may be an opportunity for the contractor to work with the designer to replace the conventional design with a precast concrete segmental design.

Brenda Nichols is a senior design engineer at Cianbro Corp. in Pittsfield, Maine.

EDITOR'S NOTE

This article is based on a presentation given by the author at the 2016 ASBI Construction Practices Seminar held in May 2016 in Broomfield, Colo. The presentation focused on Chapter 8, "Segmental Substructures" of ASBI's Construction Practices Handbook for Concrete Segmental and Cable-Supported Bridges.

Bridge over Culvert on SR 210 (US 231)

by Paul E. Froede and Brantley Kirk, Alabama Department of Transportation

Ross Clark Circle is a divided four-lane highway carrying State Route (SR) 210 that coincides with U.S. Highway 231 in a circle around Dothan, Ala., in the southeastern corner of the state. Originally constructed in the 1950s, Ross Clark Circle has seen average daily traffic increase from 5000 vehicles per day to approximately 40,000 vehicles per day and is expected to exceed 73,000 vehicles per day in 20 years.

On the west side of the city, Ross Clark Circle crosses Beaver Creek supported by a triple-barrel, 6-ft-rise-by-10-ft-span cast-in-place concrete box culvert. This culvert, under 18 ft of fill, has serious cracking and was slated for replacement in a consultant's original contract plans to widen Ross Clark Circle from four to six lanes.

The Constraining Risk

The decision to replace the culvert with another was made by the state's bridge hydraulics engineer during his site evaluation and was based on the culvert's drainage history. Much development has occurred inside Ross Clark Circle without regard to water runoff or detention. This has resulted in complete immersion of the opening with upstream flooding in severe rain events because the culvert was not designed to carry the increased flow of the creek.

Changing anything with regard to the culvert's cross-sectional drainage area has the potential to change downstream drainage characteristics, which could result in legal liability and civil lawsuits against the state. A culvert the same size as the existing has to be in that location.

The Consultant's Dilemma

Going with a new box culvert was easier said than done. In order to accommodate the additional roadway width and a 3:1 backslope, the culvert would have to be lengthened 25 ft at one end and 30 ft at the other. Above-ground water and sewer pipes at both ends within those ranges prohibited this approach.

The next plan was to consider building a shorter culvert with a retaining wall running over the ends. This idea was not considered feasible due to settlement and cost issues. In addition to these problems, the culvert would have to be built in two stages—half the culvert length at a time with traffic shifts.

To do this the contractor would have to drive sheet piles on both sides of the culvert for soil retention and then drive unembedded sheet piles over the culvert. These unembedded sheet piles would have to be supported laterally with whalers, which would have to be secured to sets of nested piles driven on both sides of the culvert.

After stage one completion, the sheet piles and the nested piles would have to be pulled and redriven and the whalers reattached at least 10 ft away to allow for construction of stage two. The perceived cost and constructability issues presented serious obstacles to moving forward.

An Innovative Solution

When Alabama Department of Transportation (ALDOT) structural engineers were presented this scenario, they recognized the opportunity to apply an accelerated bridge construction (ABC) innovation as the solution.

They determined that although the culvert was cracked, the cracks could be corrected and the culvert could continue to carry water without further concern

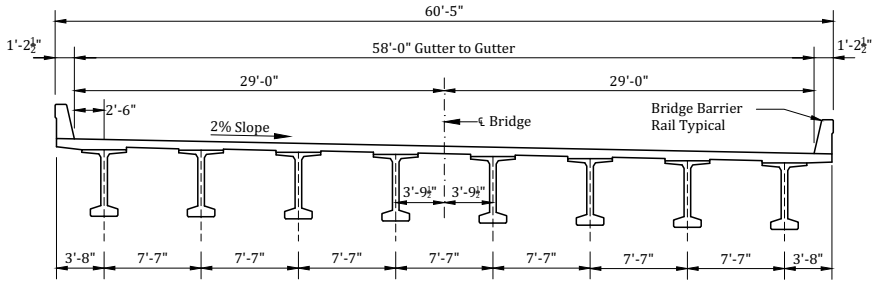

Typical section for northbound bridge. All Photos and Figures: Alabama Department of Transportation.

profile

BRIDGE OVER CULVERT ON SR 210 (US 231) / DOTHAN, ALABAMA

BRIDGE DESIGN ENGINEER: Alabama Department of Transportation, Montgomery, Ala.

PRIME CONTRACTOR: McInnis Constructs, Montgomery, Ala.

PRECASTER: Forterra Building Products (Pelham), Pelham, Ala.—a PCI-certified producer

OTHER MATERIAL SUPPLIERS: Hilman Rollers, Marlboro, N.J.

if traffic and a substantial amount of dead load were removed. This could be accomplished by constructing two bridges over the culvert, maintaining the same roadway grade, and then removing half the fill over the culvert.

In order to keep traffic moving on Ross Clark Circle, the bridge superstructures would be built adjacent to the roadway and the abutments for the single-span bridges would be built under traffic. To accomplish this, steel boxes (fabricated from H-piles) were installed over a weekend and provided working space in which to build the caps. The boxes were designed to hold back the lateral soil load and support traffic loads. Once installed, the lids were removable and the contractor was able to construct the caps while traffic continued uninterrupted above. When both sub- and superstructures were complete, traffic could be diverted to a detour for up to 7 days while the soil between the abutments was cleared and the bridges were slid or rolled into place.

Designing for Accelerated Constructability

Bridge geometry and design were controlled by roadway constraints, as well as the intent to allow the bridges to be constructed using ABC principles. The southbound bridge would carry three lanes with a gutter-to-gutter width of 48 ft and the northbound bridge would carry three through lanes and one left turn lane for a total gutter-to-gutter width of 58 ft. Both bridges would be 120 ft in length. This span length was determined so that a line drawn from the bottom corner of the cap to the bottom corner of the culvert would have a slope no steeper than a 2:1 ratio, which allows for future work on the culvert.

The horizontal curve, though slight, is still enough to require the roadway and bridge deck to be in a constant 2% cross-slope. Typically this is addressed with either pedestals or stepping the cap. But in this case, neither option is suitable because the superstructure needs to be slid on a horizontal surface. The plan then was to require the girders to be placed on steel blocks or plates in order to achieve the necessary deck slope.

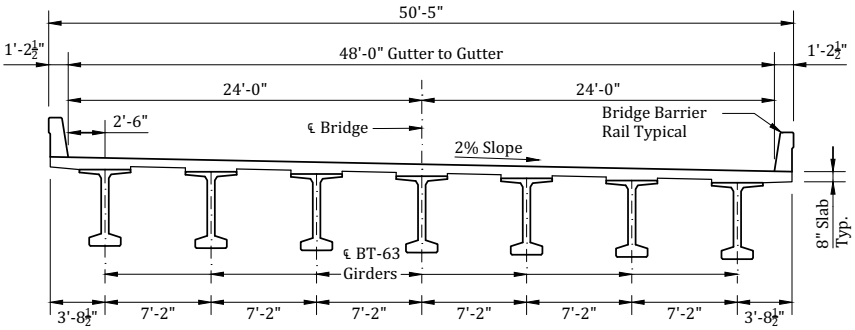

Typical section for southbound bridge.

Alabama uses a standard abutment with cap and backwall and bridge joint between the backwall and bridge deck for conventional bridge construction. This project required something that would take considerable less time to build, especially since the abutments were to be built under traffic and the risk of racking the deck during the bridge slide and damaging a backwall was too great.

Instead, ALDOT engineers used a semi-integral abutment. Jacking bays between the girders were part of the design to facilitate the vertical jacking operations necessary to move and set the bridge. The 3-ft thickness of the diaphragm required that it be modelled using the strut-and-tie method. Using a semi-integral abutment also allowed the expansion joint to be moved between the approach slab and the lug. The lug is a pavement seat and a part of the substructure because it supports the approach slab. The lug was necessary in this project because the fill behind the diaphragm was not to be compacted and settlement was expected, leaving a gap between it and the fill. Therefore, the approach slab was designed as a one-way slab to account for this. Since

Cap construction for the bridge over culvert on State Route 210 (US 231).

STATE OF ALABAMA, OWNER

BRIDGE DESCRIPTION: Twin 120-ft-long, simple-span, prestressed concrete girder bridges

STRUCTURAL COMPONENTS: Fifteen BT-63 bulb-tee girders with a 7-in.-thick cast-in-place concrete deck, semi-integral abutments, and pile-supported abutments

BRIDGE CONSTRUCTION COST: $2.43 million/$182.69 per ft² ($1.98 million engineer's estimate)

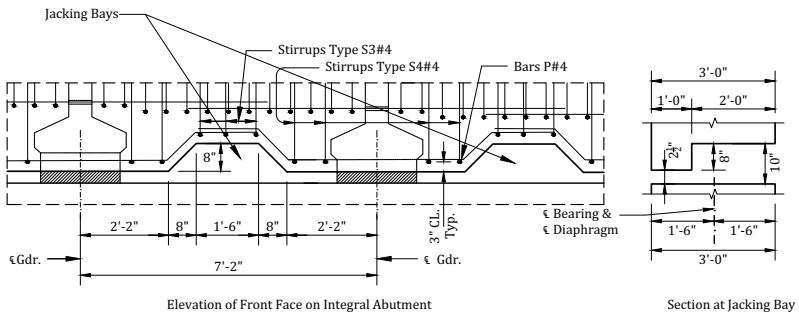

Details of jacking bays between girders in semi-integral abutment diaphragm.

One of two 100,000 lb hydraulic jack assemblies used to push the bridge.

Southbound bridge on rollers.

thermal expansion could be absorbed by the fill behind the abutment, it alleviated the need for the contractor to compact the backfill behind the abutment, saving more time.

Although the abutment caps and superstructure were built with standard 28-day, 4 ksi concrete, the lugs and approach slab bridges would have to use a 4 ksi high-early-strength mixture. This plan, as opposed to precast concrete, was the unanimous approach taken by contractors invited to a 60% plan complete design meeting with ALDOT engineers. Additionally, the concrete for the approach slabs had to be placed and cured during the 7-day closure period.

ABC Guidance

One special provision was used to guide the three aspects of ABC—the temporary shoring necessary to house cap construction, the temporary bearing supports for the superstructure during construction and sliding, and the slide/roll itself.

The shoring design was to be provided by the contractor, engineered according to the American Association of State Highway and Transportation Officials' *AASHTO LRFD Bridge Design Specifications*. Temporary supports were controlled by the latest interim edition of AASHTO's *Guide Design Specifications for Bridge Temporary Works*. All aspects of the slide itself were developed from similar special provisions provided by the Utah and Iowa departments of transportation.

A Perfect Execution

ALDOT bridge engineers worked toward developing a strong positive relationship with the contractor and its engineers; clarifying the objectives of the special provisions; and making suggestions that worked to the contractor's, and ultimately the state's, advantage. When it came time to move the bridges into place, the contractor was fully aboard with the ABC concepts—it was able to successfully roll both bridges into place and completed the approach slabs before the end of the 7-day (per bridge) incentive/disincentive period. Traffic was returned to Ross Clark Circle over the new bridge in 3 days for the southbound direction and 3 days in the northbound direction.

Resiliency

Alabama typically employs a nonstructural bridge end slab to handle traffic loads on the roadway at the bridge ends. But for this project, the bridge end slabs were designed as a one-way slab bridge. This provided resiliency during a severe rain event one week after the bridge was opened. The bridges are in the bottom of a long, shallow sag vertical curve. Roadway drainage boxes had not yet been completed and the existing drainage was inadequate to handle the high rate of flow, causing runoff to collect in the narrow median space between the bridges, soaking through the sand backfill under the southern slab on the northbound bridge. Construction inspectors discovered the runoff had soaked all the way to the other side of the bridge and had eroded a substantial amount of the sand backfill under the slab bridge. They closed the bridge immediately and contacted design engineers.

After photos were reviewed it appeared the soil beneath the lug was still intact. Onsite inspection personnel confirmed the integrity of the lug foundation, leading designers to give the go-ahead to reopen the bridge. A plan was later developed to fill the space opened by the loss of fill material.

Fill washed out under approach slab after large rain event.

Paul E. Froede is the Miscellaneous Structures & Bridge Design Section supervisor and Brantley Kirk is a public information specialist with the Alabama Department of Transportation in Montgomery, Ala.

PCI CONVENTION & NATIONAL BRIDGE CONFERENCE

Cle 2017

In Partnership with

THE PRECAST SHOW

Registration opens November 1, 2016

The PCI Convention and National Bridge Conference is the premier industry event, offering committee meetings, education sessions, and peer-reviewed paper presentations. The event offers you an outstanding opportunity to network, share your ideas and experiences, and learn from others.

The event is held in partnership with The Precast Show, the largest precast-specific trade show in North America and the one place where you can find the industry's most important suppliers and foremost equipment experts under one roof.

WHY ATTEND?

30+ EDUCATION SESSIONS

65+ COMMITTEE AND COUNCIL MEETINGS

MANY NETWORKING OPPORTUNITIES

HUNTINGTON CONVENTION CENTER • CLEVELAND, OHIO
FEBRUARY 28–MARCH 4, 2017 • WWW.PCI.ORG/CONVENTION

National Bridge Conference Co-Sponsored by

NCBC

U.S. Department of Transportation
Federal Highway Administration

Bridges for LIFE™

New Recommended Practice for Lateral Stability of Bridge Girders

by Glenn Myers, Atkins

The industry practice for precast, prestressed concrete bridge girders has evolved over the last 10 years to include higher concrete strengths and optimized girder sections, which allows spans exceeding 200 ft. These long and slender sections challenge the industry to produce girders that are laterally stable during production, transportation, erection, and during bridge deck construction. The PCI Committee on Bridges and the PCI Bridge Producers Committee recognized the need to develop and disseminate information about the lateral stability of prestressed concrete girders. They also wanted to provide recommendations to practitioners throughout the industry including designers, manufacturers, and owner agencies. The PCI Committee on Bridges established the Girder Stability Subcommittee consisting of a select group of industry stakeholders to create these recommendations.

Reliable analysis tools to evaluate lateral stability have now been developed and published in the PCI *Recommended Practice for Lateral Stability of Precast, Prestressed Concrete Bridge Girders*. These guidelines provide the tools to aid fabricators, transporters, erectors, and engineers for the evaluation of stability at all phases of the girders life from bed-to-bridge, including transfer of prestressing force, lifting from the casting bed, transporting to the yard storage area, supporting conditions in the yard storage area, transporting to the project site, erecting at the project site, and bracing requirements during girder setting and bridge deck construction. Once the girders are incorporated into the bridge with the concrete deck, stability of the girder is no longer an issue. The recommended practice also introduces the concept of a stability engineer. The term stability engineer is used to emphasize that the stability of the girder in all phases of construction needs to be evaluated or reviewed by a responsible professional.

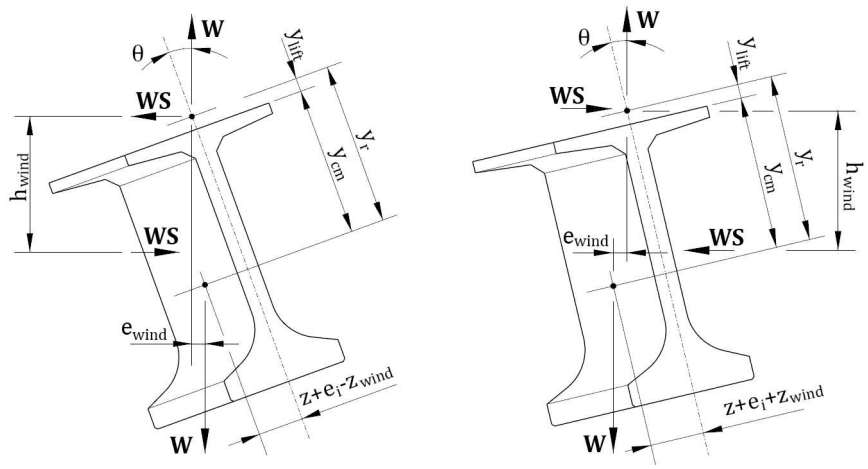

Typical free body diagrams provided in the *Recommended Practice for Lateral Stability of Precast, Prestressed Concrete Bridge Girders.*

The stability engineer may be associated with any one of the entities that designs or handles the girders.

The analysis tools developed in the recommended practice build on the ground-breaking work of Robert Mast in the late 1980s and early 1990s. The equilibrium conditions developed by Mast have been enhanced to include external forces such as wind force, centrifugal force, and dynamic impact. These forces add additional deflection and overturning moments that must be accounted for in the stability analysis. The enhanced equilibrium equations are developed from free body diagrams to establish the overall girder rotation and factors of safety against cracking, failure, and overturning. The following figures are typical of the free body diagrams that are found in the document. These particular figures illustrate the lifting condition where bidirectional wind can either increase or decrease the girder rotation. The wind force also causes a lateral deflection of the beam that add to or subtract from the lateral dead load deflection of the beam in the rotated condition. These are two different conditions that must be evaluated to properly evaluate the effects of wind on the stability of the girders. Specific equations for these two conditions are derived in the recommended practice.

The free body diagrams provide the user the background to make adjustments for specific load cases that are not anticipated by the recommended practice, allowing greater flexibility in the analysis tools. A variety of conditions are evaluated, including lifting with vertical cables, lifting with inclined cables, lifting from one end of the girder while the other end is seated, transporting, seating on bearings, and maintaining stability during deck construction.

Strategies to improve the stability of girders are also presented. The methods include increasing the concrete strength, extending an embedded stiff lifting apparatus above the top of the girder, increasing the distance from the end of the beam to girder lift or transport bunking points, adding temporary post-tensioning in the top flange of the girder, increasing the rotational constant of the spring support of transport vehicles,

Lifting of a 209-ft-long Florida I-beam. Photo: Lane Construction.

increasing the width of the bearings under a seated girder, and providing bracing or other means to restrict rotation of the girder. Recommendations on the successful implementation of these strategies are included in the document.

General criteria provide guidance in establishing assumed design and construction loads, material properties, fabrication tolerances for construction, stress limitations, and overall factors of safety. Tolerances to be considered for stability include strand and prestressing force eccentricity, sweep and lateral deflection (fabrication tolerance), camber variation from design camber, and transverse and longitudinal location of lifting devices. Design loads that may be applied to the girder before full incorporation into the bridge include permanent loads such as dead load and effective prestress, and transient loads such as dynamic impact, centrifugal force, wind loads, and construction live loads.

Additional considerations for stability are also presented to describe construction processes affecting stability during girder manufacture, transportation to the bridge site, erection at the bridge site, and stability during the construction of the bridge deck. As an example, the addition of temporary post-tensioning to add compression into the top flange is described, which will increase the factor of safety against cracking. For girders supported on elastomeric bearings, the degradation of the roll stiffness due to bearing uplift or skewed bearing orientation is described. This degradation significantly reduces the roll stiffness and stability factors of safety.

Example calculations are provided to illustrate many of the conditions encountered including lifting with vertical cables, lifting with inclined cables, seated during transport, single girder seating on bearings, and stability during deck construction. In the lifted condition, varying degrees of wind load and dynamic impact are calculated to show the sensitivity of these factors on the resulting factors of safety including a comparison of the factors of safety between lifting with vertical cables.

The PCI *Recommended Practice for Lateral Stability of Precast, Prestressed Concrete Bridge Girders* is an essential resource for stability engineers to aid fabricators, transporters, erectors, and engineers for the evaluation of stability at all phases of the girders life from bed-to-bridge.

Glenn Myers is the vice president, director of structural engineering for bridges and ports with Atkins in Fort Lauderdale, Fla.

EDITOR'S NOTE

Recommended Practice for Lateral Stability of Precast, Prestressed Concrete Bridge Girders ***is available through the PCI bookstore in hard-copy and as an e-Pub at www.pci.org.***

Eliminating Expansion Joints in Bridges

by Dr. Maher K. Tadros, PE,
e.construct.USA LLC

Traditional bridges use expansion joints in conjunction with expansion (sliding) bearing devices to accommodate superstructure movement due to volume change effects. These effects are primarily due to creep and shrinkage of concrete and both daily and seasonal temperature variations. However, use of expansion joints, especially above the abutment and pier supports, may require significant maintenance expenses and may shorten bridge life. Leakage of contaminated water and freeze-thaw cycles can cause staining and cracking of the concrete surface and locking of the expansion bearings, which would further exacerbate concrete deterioration.

Bridges with structurally continuous beams over the piers offer a number of advantages. Continuity for superimposed dead loads and live loads allows for relatively long spans. Such bridges also have better resistance to wind and seismic forces. They have significantly less deflection and vibration than simple-span bridges, and thus improved durability. Ride quality is also improved if the "bump" at the piers caused by the expansion joint is eliminated.

A number of owners have adopted measures to eliminate expansion joints on bridges, and limit their use to locations in the approach slabs only, as illustrated in Fig. 1. In addition, some owners have developed details that allow for use of simple elastomeric pads for erection purposes, or just wood blocking until the diaphragm concrete is placed. Bridges that utilize these features are sometimes called *jointless* or *integral* bridges.

There are no requirements in the American Association of State Highway and Transportation Officials' *AASHTO LRFD Bridge Design Specifications* (AASHTO LRFD specifications) for maximum bridge length allowed without expansion joints. Many state highway agencies allow eliminating expansions joints for bridges that are less than 350 ft long with steel beams and 650 ft long with concrete beams. However, there are a number of examples where bridges over 1000 ft long have performed well without expansion joints.

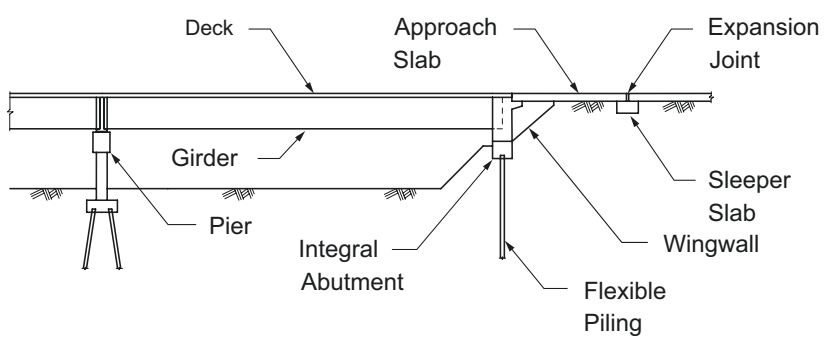

Figure 1. Elevation of a typical jointless bridge. Figure: e.construct.USA.

The discussion below presents several options available to eliminate expansion joints and provide jointless bridge superstructures. More details are available in the PCI publication *The State-of-the-Art of Precast/Prestressed Integral Bridges,* authored by the PCI Subcommittee on Integral Bridges of the Committee on Bridges.[1]

Details at Abutments

A bridge abutment has the dual purpose of resisting the loading transmitted from the supported superstructure and the pressure from the soil retained in transitioning from soil-supported roadway to "point"-supported bridge. Creating a totally integral abutment detail requires that the abutment carry the vertical loads from the end span as well as the lateral soil pressure from the adjacent soil.

A simple integral abutment detail employed by Midwest states, including Nebraska, is to directly support the concrete beams on steel cross channels that are directly welded to steel HP piles at the required seat elevations (Fig. 2). The beams are secured in position on the channels until the abutment wall concrete is placed and cured. No bearing pads are used.

If the expansion of an integral bridge due to thermal effects, for example, creates excessive stresses on the abutment or excessive deformation of the supporting piles, another option may be used (Fig. 3). The detail is called a *semi-integral* or *turn-down* abutment. In this situation, the pile cap (or abutment wall) is separated from the abutment diaphragm by compressible filler, such as extruded

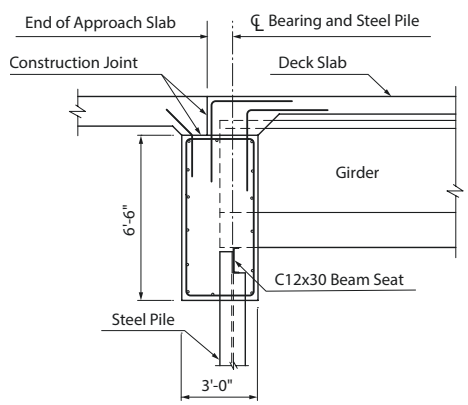

Figure 2. Example of integral abutment detail. Figure: Reference 2.

polystyrene (XPS), except at the beam bearings. The beams are set on "expansion bearing" devices that allow the beam ends to move longitudinally due to volume change effects, which is similar to the conventional abutment except that no expansion joint is provided at the end of the deck.

Similar to an integral abutment, a semi-integral abutment has an abutment diaphragm that is integrally connected to the superstructure. But a semi-integral abutment differs from an integral abutment by providing some sort of moment relief detail (hinge) between the superstructure/abutment diaphragm and the abutment. Semi-integral abutments are also recommended by some owners, regardless of bridge length, when the bridge is square or up to a 45 degree skew.

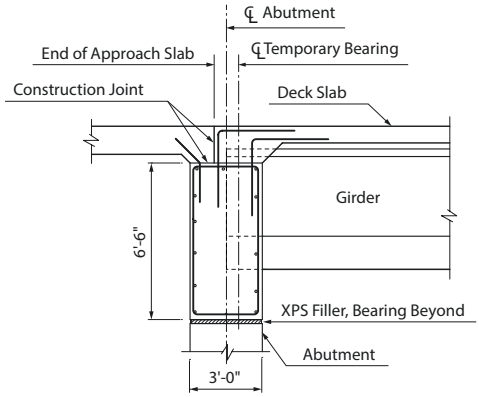

Figure 3. Example of semi-integral (turn-down) abutment detail. Figure: e.construct.USA.

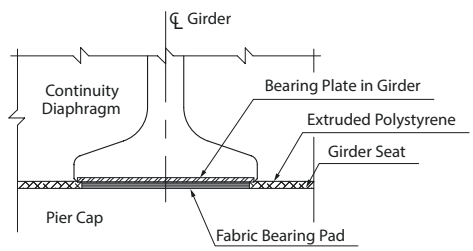

Figure 4. Example of fixed bearing details. Figure: Reference 2.

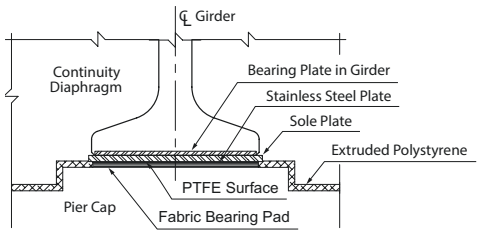

Figure 5. Example of expansion. Figure: Reference 2.

Bearing Details

Similar to abutments, integral bridge details may involve continuous concrete diaphragms from the deck slab to the piling. Washington State Department of Transportation has a detail in which the beams are temporarily supported on wooden blocking until the diaphragm concrete is placed. Other owners use bearing devices to set the beams. Diaphragms are then constructed to complete what may be considered a semi-integral system. Examples of fixed and expansion bearings, from Nebraska Department of Roads[2] details at continuity diaphragms, are given in Figs. 4 and 5. The same details may also be used for abutment locations to accompany the detail shown in Fig. 3. Similar details may be used for simply supported girders.

Details at Piers

Simple Span Beams with Continuous Deck Slabs

Most of the concrete beam bridges in Florida and Texas are currently built using a detail where the deck is continuous over the joint between girders at a pier. A typical detail is shown in Fig. 6. Their details do not include beam end diaphragms or debonding between the deck and beam. The absence of end diaphragms in these details significantly simplifies construction, but may not be feasible in states subjected to significant seismic activities. Some of the details include a saw-cut or tooled crack control joint in the deck over the pier that may be filled with sealant.

Simple Span Beams with Link Slabs

In this approach, the slab is continuous across the joint between girders at a pier, but a length of the slab is debonded from the girders on both sides of the joint. This detail reduces cracking in the continuous deck slab by distributing the deformations it experiences over a greater distance. This method is considered a cost-effective way of providing a jointless deck in several states. It has some advantage over details that provide full continuity, such as simple construction and small cast-in-place concrete volume. Because the deck is mildly reinforced and not prestressed, the tensile stress in the deck is not usually limited. To control cracking, a groove is typically formed or cut in the deck at the centerline of the pier that may be filled with a sealant.

The link slab system is common, but not limited, to states in the South and Southwest. Considerable research in the 1990s by Paul Zia and his students[3,4] produced recommendations for design and construction of link slabs. They recommend debonding the end 5% of the slab from the end of the beam to help control cracking in the link slab region. Recommended analysis is to impose the end rotations of the beams on the slab. The resulting stress in the deck reinforcement should be limited to 40 ksi and cracking should be checked with current AASHTO LRFD specifications crack control provisions.

An example of a link slab system used to remove expansion joints when rehabilitating bridges in Virginia[5] is shown in Fig. 7. In this detail, which is used for relatively short spans, the debonded length is a constant 2 ft.[5]

Continuous-for-Live-Load Beams

A common system to provide deck continuity over the piers is the so-called continuous-for-live-load system for prestressed concrete beams. The beams are first set on bearings as simple spans. The diaphragm concrete may be placed partial height (Fig. 8). The deck concrete is then placed, still on simple-span beams. Longitudinal reinforcement placed in the deck over the pier region is designed to resist all subsequent loads as a continuous span composite superstructure. This system is quite popular, especially in the Midwest, where deicing chemicals can create significant deterioration of bridges with expansion joints. It has performed well for more than 40 years. It is also quite common in other countries, such as Canada, Spain, United Kingdom, France, Italy, Belgium, and Brazil.

The behavior of this system is complicated by the interacting effects of creep and shrinkage of concrete, thermal gradient, moment redistribution due to cracking,

and soil-structure interaction. AASHTO LRFD specifications Article 5.14.1.4 allows designers to use one of four methods of design. Due to the complexity of applying the theoretical method in the specifications, the simplest and most conservative empirical method is often employed. It involves two requirements:

(a) The beams must be 90 days old before they are allowed to be connected with the cast-in-place diaphragm.
(b) Positive moment reinforcement must provide a flexural strength of 120% of the cracking moment.

The most restrictive requirement is the one that requires the girders to be 90 days old. It appears to conflict with the philosophy of accelerated bridge construction (ABC), especially for damaged-beam replacement. (Additional detailed discussion was included in the Summer 2014 issue of *ASPIRE* by Dr. Richard Miller, the lead author of NCHRP Report 519,[6] regarding the analysis options and code requirements.[7]) The second requirement results, in the author's opinion, in an excessive amount of positive moment (bottom) reinforcement. The cracking moment is a theoretical value that is no longer valid once the beam cracks at the face of the diaphragm. Crack-control reinforcement would be a more appropriate approach.

A number of states, including Nebraska, Iowa, Tennessee, and Minnesota, have sponsored research, including field trials on actual bridges, to develop semi-empirical design and detailing guidelines that have proven their validity over several decades of service. For example, Nebraska Department of Roads typically allows use of the following guidelines:

- The beams must be 30 days old before placement of the diaphragm concrete can begin.
- The positive moment connection between girders is made by extending a minimum of eight strands from each girder that overlap in the diaphragm.

Figures 8 and 9 show details at the pier and an example of a bridge recently constructed in Nebraska using the simplified approach.

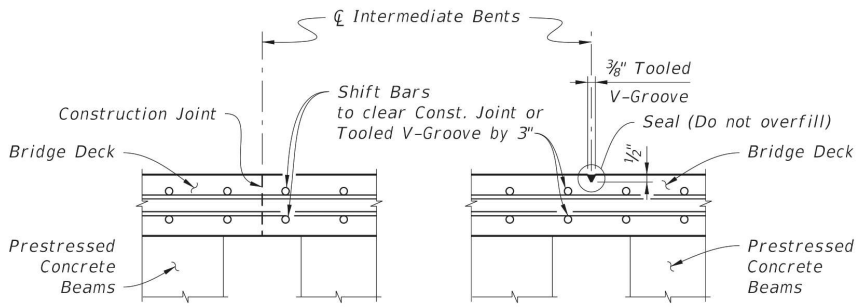

Figure 6. Florida Department of Transportation details for continuous slab over joint between simple spans. Figure: Florida Department of Transportation Structures Detailing Manual.

Threaded Rod Continuity System

A recently developed method called *threaded rod continuity* was reported by Sun et al.[8] In this method, beams are made continuous with high-strength threaded rods placed on top of the beams in the negative moment zone over the pier region. The rods are embedded in a concrete placement on the top flange of the beam that is constructed at the same time as the continuity diaphragm, as shown in Fig. 10. The result is a continuous beam for deck weight as well as all subsequent loads. This system, while slightly more complicated than the continuous-for-live-load system, allows for further optimization of the capacity of the beams. Also, as an additional benefit, the negative moment due to deck weight generally offsets the long-term positive restraint moment at the pier, eliminating the need for bars or strands extending from girders to provide a positive moment connection.

Concluding Remarks

- Elimination of expansion joints in bridge decks has been an effective method of constructing bridges. It results in reduced maintenance and improved life expectancy.
- Current consensus seems to allow elimination of expansion joints on concrete beam bridges as long as 650 ft. Much longer bridges have occasionally been constructed without reported distress.
- It is possible to replace elaborate bearing devices with simple elastomeric pads, or to make the superstructure integral with the supports without any bearings.[1] For this latter option, careful analysis would be needed.
- Workshops and webinars (such as a Florida International University ABC Center webinar by Russo in October 2012[9]) have started to demystify the phenomena that are included in many of the research papers on this topic.
- Lastly, there is a need for simple and practical national guidelines for design and detailing of the popular continuous-for-live-load connection system.

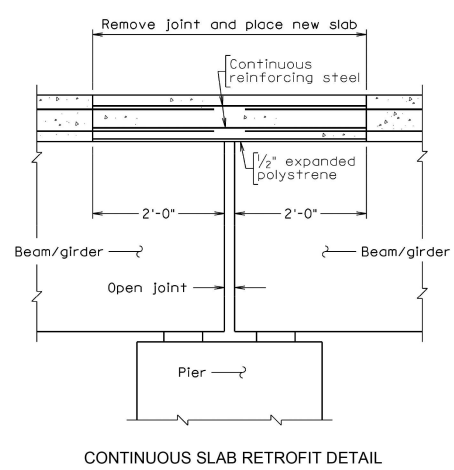

Figure 7. Link slab detail used by Virginia Department of Transportation to eliminate expansion joint in rehabilitation projects. Figure: Virginia Department of Transportation Structure Design Manual.

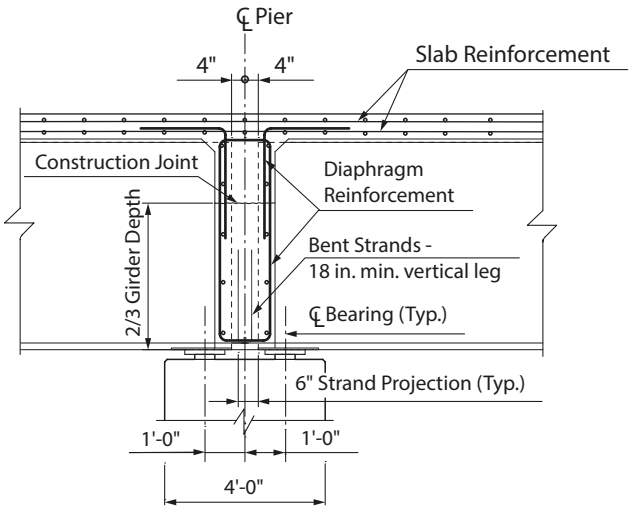

Figure 8. Example of pier diaphragm details with either fixed or expansion bearings. Figure: e.construct.USA.

Figure 9. Fairview Road Bridge over Interstate 80, near Omaha, Neb., utilizing continuous-for-live load details. Photo: e.construct.USA.

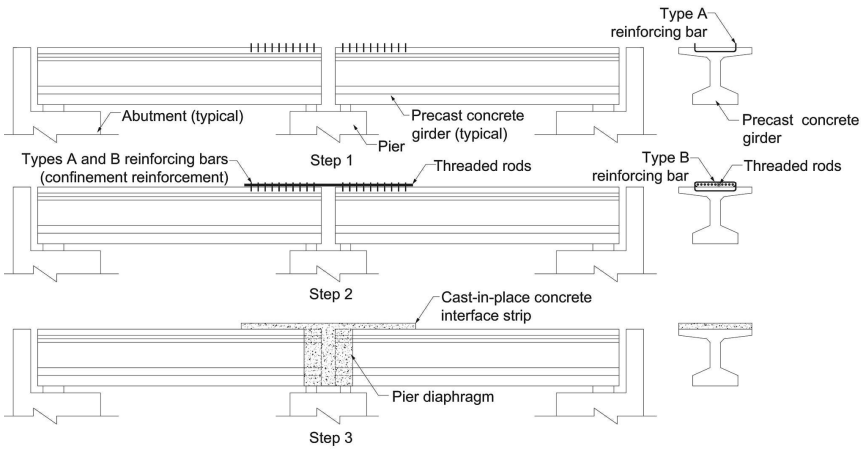

Figure 10. Construction steps of implementing threaded rod continuity system prior to deck placement. Figure: Reference 8.

References

1. PCI Subcommittee on Integral Bridges. 2001. *The State-of-the-Art of Precast/Prestressed Integral Bridges*. Precast/Prestressed Concrete Institute, Chicago, IL.
2. Nebraska Department of Roads. 2014. *Bridge Office Policies and Procedures (BOPP) Manual*. Nebraska Department of Roads, Lincoln, NE.
3. Canter, A., and P. Zia. 1998. "Behavior and Design of Link Slabs for Jointless Bridge Decks." *PCI Journal*, Precast/Prestressed Concrete Institute, Chicago, IL. V. 43, No. 3, (May-June), pp. 68-78.
4. El-Safty, A. K. 1994. "Analysis of Jointless Bridge Decks with Partially Debonded Simple Span Beams." Ph.D. diss., North Carolina State University, Raleigh, NC.
5. Matteo, A. 2015. "VDOT's Use of Concrete Closure Pours to Eliminate Bridge Deck Expansion Joints." *Concrete Bridge Views*, No. 79, http://www.concretebridgeviews.com/i79/Article1.php.
6. Miller, R. A., R. Castrodale, A. Mirmiran, et al. 2004. *Connection of Simple-Span Precast Concrete Girders for Continuity*. National Cooperative Highway Research Program Report 519. Transportation Research Board, National Research Council, Washington, DC.
7. Miller, R. A. 2014. "Special Notice: Bridges Composed of Simple-Span, Precast Concrete Girders Made Continuous." *ASPIRE*, Precast/Prestressed Concrete Institute, Chicago, IL, V. 8, No. 3 (Summer), pp 47-48.
8. Sun, C., N. Wang, M. K. Tadros, et al. 2016. "Threaded Rod Continuity for Bridge Deck Weight." *PCI Journal*, Precast/Prestressed Concrete Institute, Chicago, IL. V. 61, No. 3, pp. 47-67.
9. Russo, Francesco. "Economical Details over Piers Using Simple-for-Dead-Load and Continuous-for-Live-Load Design—Part 1: ABC Concrete Girder Bridges." Florida International University ABC Center Webinar, October 18, 2012.

Dr. Maher K. Tadros is a PCI Titan and principal of e.construct.USA LLC in Omaha, Neb.

SPECIFY PCI CERTIFICATION

THERE IS NO EQUIVALENT

Photo courtesy of USC/Gus Ruelas.

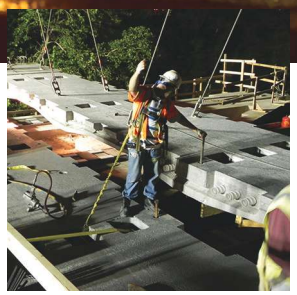

PCI CERTIFICATION

PCI certification is the industry's most proven, comprehensive, trusted, and specified certification program. The PCI Plant Certification program is now accredited by the International Accreditation Service (IAS) which provides objective evidence that an organization operates at the highest level of ethical, legal, and technical standards. This accreditation demonstrates compliance to ISO/IEC 17021-1.

PCI certification offers a complete regimen covering personnel, plant, and field operations. This assures owners, specifiers, and designers that precast concrete products are manufactured and installed by companies who subscribe to nationally accepted standards and are audited to ensure compliance.

To learn more about PCI Certification, please visit

www.pci.org/certification

IAS ACCREDITED®

Management Systems Certification Body

A PROFESSOR'S PERSPECTIVE

STRUCTURAL ENGINEERING

From graduate school to workplace

by Dr. Oguzhan Bayrak, University of Texas at Austin

In this article, I will focus on the life of a structural engineering graduate student, as she or he transitions from graduate school to a structural design office. The thoughts I will share in this regard reflect my personal experience as well as the experience of some former students, friends, and colleagues. I will be the first one to admit that anecdotes and the thoughts of a few of us should not be taken as the universal truth. Nonetheless, they may prove to be helpful to some of our readers as they transition from being students to being gainfully employed junior engineers.

As we teach various aspects of structural engineering to the next generation of engineers, we are always mindful of the fact that structural engineering is an applied science. It is with that understanding that we spend a great deal of time explaining the underlying science and engineering to our students, while grounding our discussions with a myriad of applications.

We place great emphasis on the first principles and explain them to our students in painstaking detail. We talk about the fact that the design codes are living documents and that a variety of code provisions evolve and change in time as we continue to learn more. Learning in this regard comes from various research projects' findings, lessons learned from field experience, as well as the design experience as we continue to push the boundaries of our knowledge forward.

In our classes, we state and restate the fact that the first principles are here to stay as the design codes continue to evolve and improve. We indicate that we cannot negotiate statics, strength of materials, beam theory, and the like. In contrast, we acknowledge that the state of design practice can be advanced. For example, we can solve some field performance issues by better understanding how loads flow from their point of application to the foundations by using advanced analysis and design techniques. For instance, as I covered in some recent articles and will do so in future articles, the use of the strut-and-tie method in substructure design can lead to better-performing, longer-lasting bridges.

A typical structural engineering student, within the context described previously, finds a great deal of opportunities to take interest in structural mechanics, analysis, design, and the like as they go through school. All structural engineering students inevitably experience the great satisfaction derived from solving complicated problems by imposing simplifying engineering assumptions.

As a structural engineering student advances their maturity by taking a variety of classes, the mystery of "Why am I learning this?" and "Will I ever get to use this concept?" dissipates. All of a sudden the use of statics and structural analysis become second nature to a typical student. Yet the hunger to understand the "Why?" grows.

The more a student digs into the very important details of the profession in formal classes, the more they get convinced that there is so much more to learn. Frankly, this realization results in somewhat of an unsettled feeling, since all has not been fully understood, and at some point, the final bell rings. . .an administrative representative of a university shakes the student's hand and hands over the long-awaited degree. Now what? You guessed it correctly. Then comes the first job.

Each year, as I deliver some parting words to the students going through our program, I indicate that structural engineering is an "old person's profession." That is, in our profession, experience is extremely important; a student gets out of school with all the right tools in their toolbox, but they have not quite used them in the "real world." In doing so, the oversight provided by more senior engineers in their new job is extremely important. Mentoring provided by immediate supervisors is probably every bit as important as understanding the fundamentals while going through school.

That is, it is extremely important for a junior engineer to see that his or her calculations, drawings, or designs are being reviewed by a senior engineer and that a senior engineer can spot errors or verify the correctness of calculations on the back of an envelope, expediently. The first time a junior engineer sees that his or her work can be verified so quickly will serve as an invaluable educational experience. . .the appreciation for experience will rapidly grow in the eyes of a junior engineer.

So, what is a junior engineer supposed to do as they get ready to leave school and take their first job? First, they must be cognizant of the fact that we have all been there. We all had to transition from a classroom setting to the design office environment. We all had successes and we all made mistakes and learned from all of those. In my view, making mistakes is quite OK. Not learning from them is not OK, because that would be a missed opportunity.

Each junior engineer needs a mentor, a more senior colleague, to look over their shoulder to make sure that all is going well. All employers I know recognize this fact and provide the necessary mentoring, guidance, and oversight to their new employees.

(a) Formal Training / Theory (b) Complex Structural Details (c) An Iconic Bridge

Transition from formal education to practice. Figure: Hossein Yousefpour.

Next, the faster a junior engineer realizes the fact that structural engineering is all about details, the better off they will be. The devil is always in the details. We have all seen great-performing structural details as well as details that have caused significant problems in our careers. The importance of attention paid to details cannot be overemphasized.

Finally, a junior engineer must understand that they embarked on a profession that is committed to lifelong learning. The learning aspect of an engineer's life cannot and should not stop. They will have to learn from personal experiences as well as others' experiences. Frankly, it is the learning aspect of the profession that a great majority of us enjoy the most. Staying engaged in professional organizations, serving on technical committees, and reading articles in technical journals and magazines like *ASPIRE*™ all help us further our education.

PCI Big Beam Contest 2016 Winners

All entries were ranked by total number of points earned per the contest rules. The first place team, for the second year in a row, was from the University of Notre Dame in South Bend, Ind.

First place: University of Notre Dame; Notre Dame, Ind. (Zone 4)
Faculty advisor: Yahya Kurama, PhD, PE
PCI producer: StresCore, Inc.; South Bend, Ind. (John Reihl)
Student team: Megan McKeon, Luis Gabriel Muñoz Dispa, Tyler Thompson, Thomas Sweeney, Anna Spatz, Molly O'Toole, Ryan Shea

Best Report
University of Alabama [Team Jelly Beam]; Tuscaloosa, Ala. (Zone 6)
Faculty advisor: Sriram Aaleti, PhD, P.Eng.
PCI producer: Gate Precast; Monroeville, Ala. (Mark Ledkins)
Student team: Vidya Sagar Ronanki, Saeid Hayati, David Burkhalter, Md. Kobir Hossain

Best Video
Iowa State University [Team 1]; Ames, Iowa (Zone 3)
Faculty advisor: Sri Sritharan, PhD
PCI producer: Forterra Pipe and Precast; West Des Moines, Iowa (Jeff Butler)
Student team: Michael Rosenthal, Nathan Scharenbrock, Anmol Pakhale

Bridge Deck Replacement and Extending Webs of Precast Concrete Bulb-Tee Girders to New Superelevation

by Dr. Tanarat Potisuk and Craig Shike, Oregon Department of Transportation, and Craig Gries, Oregon State Bridge Construction Inc.

Built in 2003, the Lower Perry Bridge is located on Interstate 84 (I-84) near La Grande, Ore. The bridge is situated on a 1066-ft-radius horizontal curve with a total length of 426.5 ft, including three spans made simple for dead load and continuous for live load. During the original design process, a decision was made to construct the bridge with a reversing 2% superelevation for drainage purposes. After several truck toppling accidents at the bridge, Oregon Department of Transportation decided to replace the old bridge deck with a properly designed superelevation varying from 2% to 5%.

The as-designed plan for deck replacement used a traditional concept to cut the diaphragms; remove the concrete deck, while preserving girder flanges; jack the girders to set elevations; and construct new diaphragms and a new bridge deck. These construction stages are possible, but involved the following risks and issues during construction:

- Girder instability during jacking operation
- Safety for construction workers
- Complicated work containment system
- Long construction time

To reduce and resolve the mentioned problems, bridge contractor Oregon State Bridge Construction, consultant McGee Engineering, and general contractor Oregon Mainline Paving submitted a value engineering proposal to cut the bridge deck including the precast concrete girder flanges, extend the girder webs to new set elevations, and build a new bridge deck. With this method, the girders could be left in place at all times during the construction.

Deck removal operation is shown. The precast concrete flanges were cut with the removal of the existing bridge deck. A jack hammer was used to expose stirrups before they were bent and extended by mechanical couplers. Photo: Oregon Department of Transportation.

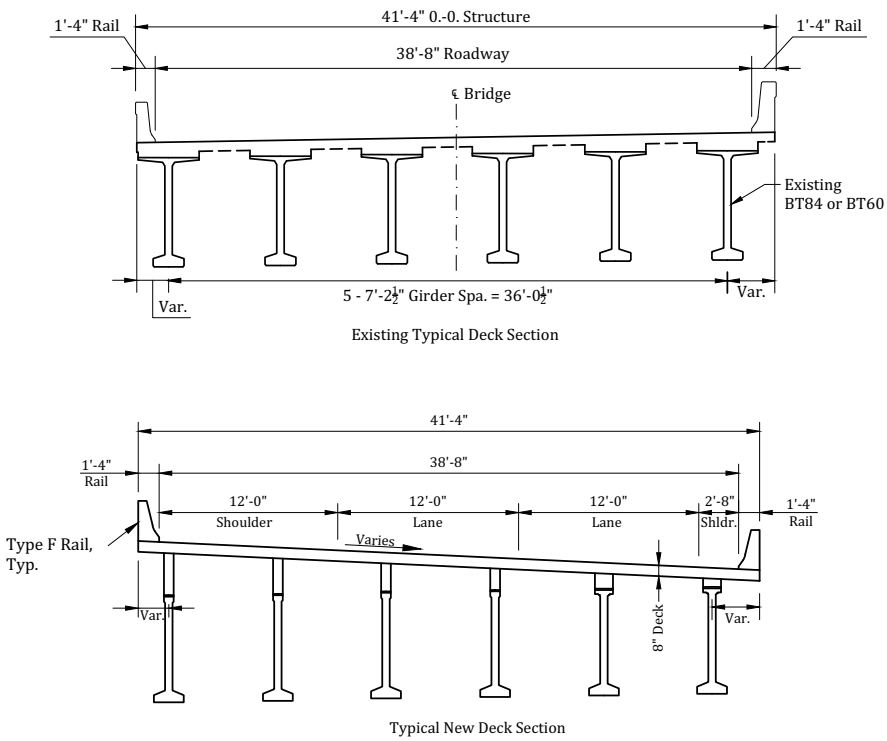

Existing and new typical sections for bridge deck replacement with new superelevation. Figure: Oregon State Bridge Construction and McGee Engineering.

Immediately after the existing bridge deck was cut, girder sweep up to 1 in. was observed in the exterior girder. The girder sweep was stabilized by the existing intermediate diaphragm in each span. After the deck removal was complete, cracking at the bottom of precast concrete girders near interior bents was observed. The cracking was caused by the upward bending movement of the continuous girder configuration that occurred due to the dead load removal. The cracks were closed after the new bridge deck was constructed. Near interior bents, cracks in the new extended webs were observed and later injected with epoxy. Skin steel was not adequately provided in these portions.

New bridge deck with extended webs of precast concrete bulb-tee girders. Photo: Oregon Department of Transportation.

This construction concept provided safe construction and was done quickly. The concept can be applied even when deck grades remain unchanged. Cracking issues were minor and can be reduced by providing additional reinforcement. Girder sweeping can occur after uncoupling bridge deck from girders. Restraining elements should be planned and arranged.

Dr. Tanarat Potisuk is a prestressed concrete standards engineer and Craig Shike is a bridge operations and standards managing engineer, both with the Oregon Department of Transportation in Salem, Ore. Craig Gries is president of Oregon State Bridge Construction Inc. in Scio, Ore.

BUYERS GUIDE

The companies listed on these pages have supported *ASPIRE*™ magazine during 2016. Each produces a high-quality product or service targeted to the bridge industry and is worthy of your consideration. In choosing *ASPIRE* as the way to communicate with you, they show enormous confidence in us.

These companies share in the significant success achieved by *ASPIRE*. Advertisers put their money where their mouths are, and they can rightfully be proud of *ASPIRE*'s success and our ambitious plans for 2017. They enable us to move ahead with confidence to better serve our readers.

Just as important, the advertisers create valuable messages for our readers. Their announcements and product information supplement our own content to keep readers current with new ideas.

Whenever an opportunity arises, please contact an *ASPIRE* advertiser, ask them for more information, and thank them for their investment in the bridge community. For an easy way to make a contact, go to **www.aspirebridge.org** and select "Advertisers." Clicking on any listing will take you to their home page.

We appreciate their support, and yours, for making *ASPIRE* the most read and talked about bridge magazine!

	DESCRIPTION	ADDRESS/PHONE
CORTEC CORPORATION www.cortecvci.com/index2.php	**Cortec® Corporation** offers VpCI® and MCI® Technologies for packaging, metalworking, construction, electronics, water treatment, oil/gas, and other industries. Cortec® Corporation is ISO 9001 and ISO 14001:2004 Certified.	4119 White Bear Parkway St. Paul, MN 55110 800.4.CORTEC
DSI www.dywidag-systems.com	**DYWIDAG-Systems International USA** produces THREADBAR® high-strength GR100 reinforcement in sizes up to #20 as well as all types of post-tensioning and cable-stay systems.	320 Marmon Dr. Bolingbrook, IL 60440 630.739.1100
FIGG www.figgbridge.com	**FIGG** specializes exclusively in the design and construction engineering of American bridge landmarks.	424 North Calhoun Street Tallahassee, FL 32301 850.224.7400
AEGION Stronger. Safer. Infrastructure. FYFE www.fyfeco.com	**Fyfe Co. LLC** manufactures Tyfo® products and Fibrwrap® strengthening systems, and is ISO 9001:2008 registered. Fyfe, which includes a global network of certified applicators, is a global leader in the use of externally bonded Fiber Reinforced Polymer (FRP) systems for the strengthening, repair and restoration of concrete, steel, and other structures.	3940 Ruffin Road, Suite C San Diego, CA 92123 858.642.0694
HEADWATERS RESOURCES www.flyash.com	**Headwaters Resources** manages and markets CCPs, including fly ash. Fly ash use improves concrete performance and creates significant benefits for our environment.	10701 S. River Front Parkway, Ste. 300 South Jordan, UT 84095 888.236.6236
HELSER INDUSTRIES www.helser.com	**Helser Industries** designs and manufactures steel forms for producing precast and prestressed concrete components for numerous commercial applications.	10750 SW Tualatin Rd, P.O. Box 1569 Tualatin, OR 97062 503.692.6909
HILMAN ROLLERS WWW.HILMANROLLERS.COM www.hilmanrollers.com	Since 1953, **Hilman Rollers** has been a manufacturer of low-profile, low-friction and high-capacity load rollers and custom skidding solutions; to move the heavyweights. We offer standard load rollers with capacities from 1-ton up to 1000-tons, and have provided custom solutions with up to 5000-tons capacity.	12 Timber Lane Marlboro, NJ 07746 732.462.6277
KSF INC. STRUCTURAL & CONSTRUCTION ENGINEERING www.ksfinc.us	**KSF, Inc**. provides innovative, economical and elegant structural designs for clients, as well as construction engineering services. The firm integrates it's experience and knowledge of local materials, policies and practices into the designs and incorporates the most efficient construction methods that minimize impact on the community.	615 Piikoi Street, Suite 300 Honolulu, HI 96814 808.593.0933

DESCRIPTION		ADDRESS/PHONE
www.larsa4d.com	**LARSA Inc.'s** software for bridge analysis and design addresses specialized needs of a variety of bridge structures, including cable, segmental, curved, box, and other types, and is a standard in leading U.S. firms.	Melville Corporate Center 68 S. Service Road, Suite 100 Melville, NY 11747 800.LARSA.01
www.maxusacorp.com	**MAX** developed the world's first battery-operated rebar tying tool in 1993 and since then has been revolutionizing rebar tying work all around the world. One pull of the trigger and you can tie rebar in less than a second. MAX rebar tying tools will significantly increase your job productivity.	257 East 2nd Street Mineola, NY 11501 800.223.4293
www.mi-jack.com	**Mi-Jack Products Inc.** is recognized as an industry leader and innovator in Travelift® and Translift™ rubber tire gantry crane manufacturing, sales, service, and support.	3111 W. 167th Street Hazel Crest, IL 60429 708.596.5200
CONSTRUCTION www.pcl.com	**PCL Construction**'s a group of independent construction companies working in the U.S., Canada, the Caribbean, and Australia. PCL's one of North America's largest contractors with diverse operations in civil infrastructure, heavy industrial, and buildings markets.	2000 South Colorado Blvd Tower Two Suite 2-500 Denver, CO 80222 919.859.5210
www.erico.pentair.com	**Pentair** is the global manufacturer and marketer of the LENTON® brand of engineered products for concrete reinforcing steel connections.	34600 Solon Rd. Solon, OH 44139 800.248.2677
www.safway.com	With more than 114 locations in the U.S. and Canada and a growing system of distributors worldwide, **Safway** Group companies deliver efficient, high-performance multiservice solutions – THE SMART WAY® – by offering experience and expertise in access, scaffolding, insulation, fireproofing, surface preparation and coatings. Safway has been an industry leader since 1936 and Safway Group companies serve the petrochemical, oil and gas, power, refining, marine, manufacturing, transportation and commercial construction industries.	N19 W24200 Riverwood Dr. Waukesha, WI 53188 850.222.2737
www.stalite.caom	**Stalite** is a high-performance lightweight aggregate with a wide range of uses, including structural lightweight concrete.	PO Box 1037 Salisbury, NC 28145 800.898.3772
www.wbacorp.com	**Watson Bowman Acme**, a BASF Construction Chemicals business, is a market leader in the area of expansion control systems and solutions for civil structures. For more than 65 years, WBA has developed and manufactured products for some of the world's most unique and complex projects. We offer specialty products and services to all industry sectors - bridge and highway, parking structures, stadiums and arenas and also architectural buildings. It is our goal to be our customer's strongest partner for expansion control systems and responsible solutions.	95 Pineview Dr. Amherst, NY 14228 800.677.4922
www.williamsform.com	**Williams Form Engineering Corporation** has been offering ground anchors, concrete anchors, post-tensioning systems, and concrete forming hardware to the construction industry for over 85 years.	8165 Graphic Dr. Belmont, MI 49306 616.866.0815
www.pbworld.com	**WSP | Parsons | Brinckerhoff** provides a full range of services for bridges—from feasibility studies and environmental permitting, through preliminary and final design, to construction management, inspections and rehabilitation. Experienced in both steel and concrete, the firm has worked on cable-stayed, arch, truss, segmental, suspension, girder, movable and floating structures as well as state-of-the-art thermoplastic and FRP bridges. For more than a century, WSP | Parsons Brinckerhoff has contributed to some of the world's most notable bridges.	One Penn Plaza New York, NY 10119 212.465.5000

Indiana

Officials at Indiana Department of Transportation use quarterly meetings, conferences, and consultant ideas to expand techniques and improve designs

by Anne Rearick and Jeremy Hunter, Indiana Department of Transportation

Indiana is a really flat state, which mitigates some of the topographical challenges faced by other states. Even so, we continually look for ways to improve our bridge designs and make them more efficient and faster to build. Those methods include quarterly meetings with the Federal Highway Administration (FHWA) and consultants, a bridge conference, and encouragement to outside designers and contractors to examine new techniques.

The ASCE-INDOT Structures Committee was formed in the 1990s by the Indiana Department of Transportation (INDOT) and the Indiana Section of the American Society of Civil Engineers (ASCE) to address topics related to the design and construction of bridges and retaining walls. The group was formed when INDOT decided to produce a bridge-design manual and sought perspectives from other sources. That input proved so valuable that the committee became permanent, holding quarterly meetings.

The current committee consists of 18 members: eight INDOT staff, seven design consultants (one from each firm), two industry and two academic members (with two slots currently unfilled), and a representative from FHWA. Members typically either attend or send a representative, indicating the value that they too place on these meetings.

This collaboration provides insight into bridge history that INDOT may not know, new techniques being used in the state by other owners, and work in other states with which members work. This input helps keep INDOT current and allows it to put policy changes into place to create better practices and designs. This volunteer effort by knowledgeable people provides a significant benefit to the state.

Expansion Joint Designs Improved

For instance, one of the committee's most recent focuses has been to improve joint designs, to extend their service life. Typically, INDOT gets a service life of 7 years for smaller joints and 10 years from Class SS (strip seal) expansion joints. The state looked at link-slab design options and are working with other states to find solutions that do not require proprietary designs, are easily repaired, and have extended service life.

One approach tried when upgrading or rehabilitating an existing bridge has been to change the superstructure to semi-integral spans to eliminate joints where possible. INDOT also is looking at new methods to maintain the ends of beams to prevent deterioration.

These topics and others, such as pile-driving techniques and accelerated bridge construction

The Accelerate 465 project reconstructed an 11-mile corridor of Interstate 465 and rebuilt or upgraded seven major interchanges. It included several bridges designed with precast concrete bulb-tees or U-beams. Photo: Indiana Department of Transportation.

The I-69 Twin Bridges over the Patoka River at the Pike-Gibson County Line feature an 8-in.-thick, cast-in-place concrete deck. Photo: Indiana Department of Transportation.

The I-69 Twin Bridges over the Patoka River also feature cast-in-place pier caps, columns, and drilled shafts. Photo: Indiana Department of Transportation.

(ABC) methods, are discussed annually at the bridge conference. This meeting not only gives INDOT a chance to review new techniques but allows it to encourage attendees to examine new ideas through presented case histories.

The state is very interested in doing more projects with ABC techniques of all types. Next February, INDOT will let an alternate-bid contract using either self-propelled modular transporters or slide-in construction for twin bridge replacements. The hope is that this project creates more awareness among state designers and contractors for the potential this concept offers.

Prefabricated components that can be delivered to the site and erected quickly is a key ABC method that interests INDOT. This option plays well to the state's strengths, as about 90% of bridge designs use concrete superstructures. Road crossings typically feature bulb-tee designs with mechanically stabilized earth abutments, while water crossings use spill-through end bents.

Bulb-Tees Favored

Bulb-tee prestressed concrete beams have become INDOT's basic design due to the efficiency of their spans and their availability in the state. Local precast concrete fabricators introduced the beams in 2004, and they allow span lengths up to 160 ft with a single prestressed beam.

Recent examples can be found along Interstate 465 (I-465) in Indianapolis, where a host of bulb-tee bridges were constructed due to their economy and efficiency. The design is ubiquitous around the state, as it has become one of the solutions often selected. That is especially true for longer bridges, where three-span designs are common.

Another recent project was the widening and rebuilding of the west leg of I-465 between Interstate 65 (I-65) and Interstate 70 (I-70) as part of the Accelerate 465 project. Completed in 2012, it reconstructed an 11-mile corridor of I-465 and rebuilt or upgraded seven major interchanges. The $423-million program responded to increased traffic demands and safety requirements and featured several bridges designed with precast concrete bulb-tees or U-beams.

INDOT also uses a lot of precast concrete three-sided culvert designs. They are simple to design and have simple, quick installations. In most cases, shorter and more basic bridges are designed in-house. Timing and complexity often dictate that design should be contracted out, especially if the bridges are part of a larger, more complicated highway project.

INDOT has worked with consultants on some significant bridges in recent years. One notable design was for the Interstate 69 (I-69) Twin Bridges over the Patoka River at the Pike-Gibson County Line. The 4400-ft-long bridge features concrete bulb-tee beams. The bridges were the longest on the nation's longest continuous section of new interstate highway and were constructed in an environmentally sensitive area. See *ASPIRE*™ Spring 2013 for more details about these bridges.

The I-69 Twin Bridges over the Patoka River at the Pike-Gibson County Line were constructed with 244 precast concrete bulb-tee girders (shown during construction under three seasons). Photo: Bernardin Lochmueller & Associates.

Preservation Work Increased

INDOT is performing more preservation and rehabilitation work as new techniques arise that can add service life. Using budgets creatively helps to maximize impact, but the state also must be careful to ensure preservation work achieves a significant benefit. Finding the proper point at which preservation offers a better option than replacement remains a key challenge.

Indiana has started using polymeric overlays for waterproofing systems on bare concrete decks as well as latex-modified bridge overlays and hydro rehabilitation techniques. The state also is focusing more attention on preventative measures to add service life. Keeping decks repaired and in good condition ensures beams retain their strength and the bridge gains additional service life.

INDOT also is focusing greater attention on railing systems, which often serve as the most visible "face" of the bridge. Some railings are historic and architecturally significant, but they also must meet higher crash-test standards than when the originals were installed. Finding the right options takes considerable research, but it pays off by achieving all the aesthetic and functional needs.

Uncovering these new techniques and applications are greatly aided by the collaboration received from various programs. By meeting regularly and sharing ideas, INDOT hopes to create relationships and provide an environment in which ideas are shared and used to improve state bridge projects.

Anne Rearick is director of bridges and Jeremy Hunter is bridge design manager at the Indiana Department of Transportation in Indianapolis, Ind.

FHWA Supports Advanced Modeling with Bridge Information

by Dr. Brian Kozy, Federal Highway Administration

Information modeling refers to an advanced modeling approach that is based on generalized definition of the "objects" that make up a system. It is a holistic digital representation of physical and functional characteristics of a facility, which provides a shared knowledge resource for information to support a reliable basis for decisions during its life cycle. Information modeling is relatively mature and commonly applied in the building industry, but much less so in the bridge industry.

Some form of computer modeling and analysis has been done for most of our nation's bridges, from conception to design to fabrication to construction to inspection to management to demolition. Bridge information modeling (BrIM) offers the opportunity to use digital project delivery, multi-dimensional analysis, visualization, virtual assembly, automated machine control, fast routing and permitting, network-level study, and more, to integrate project development, construction, and asset management.

Broad implementation of BrIM would provide a transformative change in the way that engineers and owners execute workflows. It would provide a framework to move the engineering community beyond the outdated practice of communicating information via two-dimensional plans that require multiple manual data reentries downstream. It would allow engineers to discover conflicts and problems with fabrication and construction earlier in the design development and mitigate them in the office instead of in the field. It would move engineering away from "bookkeeping" activities such as quantity takeoffs and plans and shop drawing development/approval and move toward creation of a shared resource that is more useful to others downstream.

Need

Current bridge modeling practice is limited in sophistication, level of detail, compatibility, exchangeability, and downstream value. BrIM-based engineering tools are available in some commercial software, but they are mostly

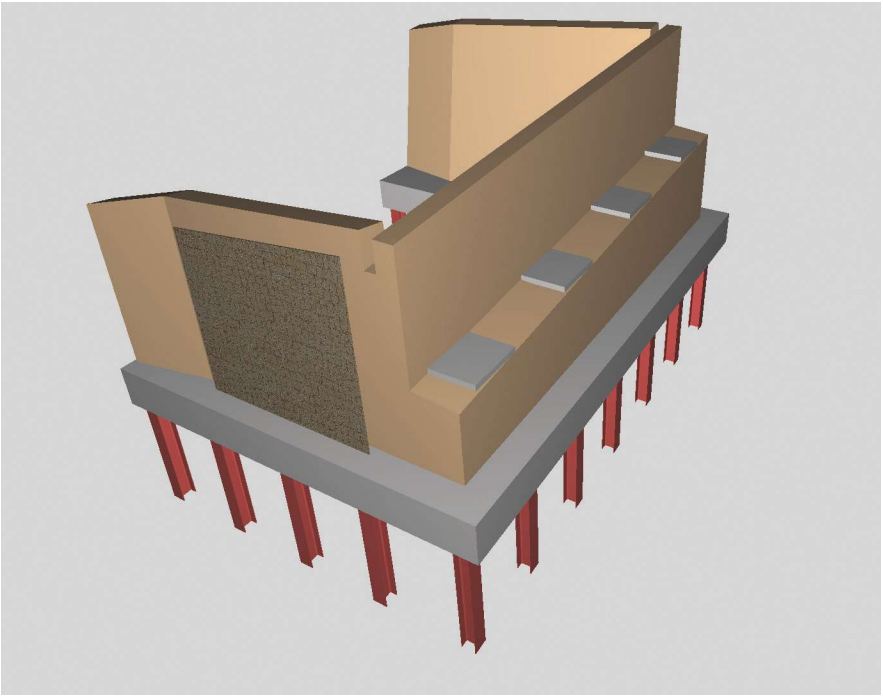

Bridge abutment model. All Figures: Federal Highway Administration.

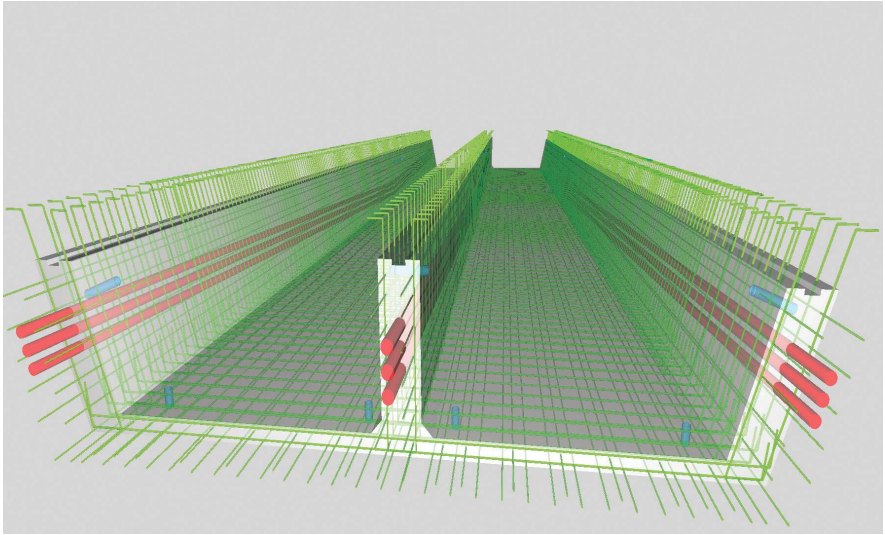

Concrete post-tensioned box-girder model.

marketed as a special feature to sell a proprietary product. What is needed is national leadership by governing bodies to develop and promote an open, industry-consensus approach to BrIM modeling that can be implemented without dependence on specific software.

Every bridge in the United States must have a file that includes a load rating and its National Bridge Inventory data. If this could be done using an open, robust BrIM model, errors and omissions could be reduced. Conflicts and associated delays could be mitigated. Conditions and impacts could be better tracked. Efficiencies could be gained. Designs and evaluations could be enhanced. Costs could be reduced. Ultimately, safety of bridges and mobility of their users could be improved.

FHWA Accomplishments

With the help of the University at Buffalo, State University of New York (SUNY), CH2M Hill Inc.(CH2M), and the National Institute of Building Sciences (NIBS), FHWA has been studying and developing ways to standardize the implementation of BrIM in bridge engineering. Work has progressed on two parallel paths in recent years. SUNY and CH2M have been developing new BrIM objects with powerful parametric definitions in an open format that could be freely shared among users—ideally via some kind of national library or online community. This approach has been given the name "openBrIM" and can be applied using freeware developed by Red Equation Corp. (available online at https://openbrim.org/www/brim/). The FHWA work related to openBrIM is documented in published reports that can be found at www.fhwa.dot.gov/bridge/protocols/ and www.fhwa.dot.gov/bridge/pubs/hif16010.pdf.

NIBS has been evaluating the use of an existing standard called Industry Foundation Classes (IFC), which has a well-established and active stewardship body and general acceptance by the software community. This standard has been developed and used primarily for buildings, but there is ongoing development that will add the definitions necessary to effectively model bridges and other infrastructure. One such item is roadway alignments and placement of objects related to these alignments. NIBS was able to develop an IFC model of two common girder bridges to the level of detail necessary to communicate the information found in the design plans. NIBS also developed a Model View Definition (MVD) documentation, which provides the necessary specifications for software implementation. The FHWA work related to BrIM with IFC is documented in published reports that can be found at www.fhwa.dot.gov/bridge/protocols/ and www.fhwa.dot.gov/bridge/pubs/hif16011/.

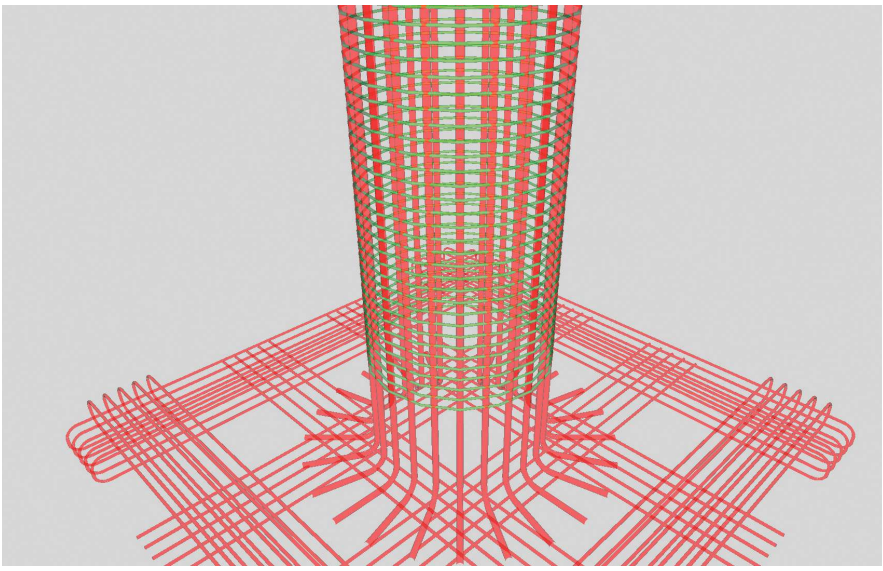

Bridge column and footing reinforcement model.

Looking Ahead

The Federal Highway Administration (FHWA) will continue to develop and demonstrate open, software-neutral standards for BrIM modeling through research, committee support, and case studies. FHWA is working with the American Association of State Highway and Transportation Officials to lead the industry towards consensus and implementation of credible, robust digital standards that will allow software providers to develop translators to facilitate transfer of data among different software applications in a common schema/format. FHWA communication and stakeholder outreach will continue through webinars and workshops. Stay tuned!

CONCRETE CONNECTIONS

Concrete Connections is an annotated list of websites where information is available about concrete bridges. Links and other information are provided at www.aspirebridge.org.

IN THIS ISSUE

http://www.wsdot.wa.gov/Projects/SR520Bridge/BridgeAndLandings/
This is a link to the project website for the SR 520 Floating Bridge and Landings Project that was the topic of the Project Profile article on page 18. Project photos, renderings, and some videos are available on the website.

https://abc-utc.fiu.edu/mc-events/alabamas-bridge-slide-on-ross-clark-circle-over-an-existing-culvert/?mc_id=149
This is a link to the archived webinar page for the Dothan Bridge Slide Project that was the topic of the Project Profile article on page 26. The webinar was presented by Paul Froede on July 14, 2016, as part of the monthly webinar series sponsored by the Florida International Accelerated Bridge Construction Center. A video of the webinar as well as a copy of the presentation are available on the website.

http://www.dothanbridge.com/
This is a link to the Alabama Department of Transportation project website for the Dothan Bridge Slide that was the topic of the Project Profile article on page 26. A conceptual video of the bridge slide and the time-lapse video of the actual slide are available on the website.

http://nlcs1.nlc.state.ne.us/epubs/r6000/b272-2007.pdf
This is a link to the Nebraska Department of Roads report "Design Aids for Threaded Rod Precast Prestressed Girder Continuity System" that provides information on the threaded rod continuity system that was discussed in the Concrete Bridge Technology article on page 32.

http://www.concretebridgeviews.com/i79/Article1.php.
This is a link to the article by Matteo in *Concrete Bridge Views* titled "VDOT's Use of Concrete Closure Pours to Eliminate Bridge Deck Expansion Joints" that was cited as a reference in the Concrete Bridge Technology article on page 32.

http://onlinepubs.trb.org/onlinepubs/nchrp/nchrp_rpt_519.pdf
This is a link to the NCHRP Report titled "Connection of Simple-Span Precast Concrete Girders for Continuity" that was cited as a reference in the Concrete Bridge Technology article on page 32.

https://abc-utc.fiu.edu/mc-events/economical-details-over-piers-using-simple-for-dead-load-continuous-for-live-load-design-part-1-abc-concrete-girder-bridges/?mc_id=39
This is a link to the archived Florida International Accelerated Bridge Construction Center webinar page for the presentation by Francesco Russo that was cited as a reference in the Concrete Bridge Technology article on page 32.

http://www.in.gov/dot/div/contracts/standards/bridges/bridges.html
This is a link to the Indiana Department of Transportation Bridges and Structures webpage on which information about the ASCE-INDOT Structures Committee, which was mentioned in the featured state article on page 44. Available information includes the committee operating document and meeting minutes.

Bridge Research

NEW **http://www.dot.state.mn.us/research/TS/2015/201550TS.pdf?utm_content=&utm_medium=email&utm_name=&utm_source=govdelivery&utm_term=**
This is a link to the summary of a recently published report by the Minnesota DOT titled "Reducing Loss of Concrete Bridge Girder Prestress Force by Accounting for the Effects of Temperature." A link to the full report is provided.

NEW **http://www.intrans.iastate.edu/research/documents/research-reports/Buchanan_LWFA_bridge_deck_w_cvr.pdf**
This is a link to a recently released report by the Institute for Transportation at Iowa State University that investigates the feasibility of internal curing as a means to promote hydration of portland cement concretes on bridge decks.

NEW **http://www.virginiadot.org/vtrc/main/online_reports/pdf/16-r13.pdf**
http://www.virginiadot.org/vtrc/main/online_reports/pdf/16-r14.pdf
http://www.virginiadot.org/vtrc/main/online_reports/pdf/16-r15.pdf
These links are to recently released reports on Virginia Department of Transportation investigations of the effectiveness of shrinkage reducing admixtures, lightweight aggregate, and shrinkage compensating materials in concrete as a means to alleviate cracks in bridge deck. The first report is titled "Reducing Cracks in Concrete Bridge Decks Using Shrinkage Reducing Admixture," the second is titled "Use of Lightweight Concrete for Reducing Cracks in Bridge Decks," and the third is titled "Evaluation of Bridge Deck With Shrinkage-Compensating Concrete."

NEW **http://www.virginiadot.org/vtrc/main/online_reports/pdf/16-r11.pdf**
This is a link to a recently released Virginia Department of Transportation report that investigates cost-effective and aesthetic self-consolidating concrete mixtures for use in bridge beams and pier caps.

NEW **http://www.virginiadot.org/vtrc/main/online_reports/pdf/16-r16.pdf**
This is a link to a recently released report by the Virginia Department of Transportation that describes the use of electrochemical chloride extraction as a means to remove chlorides from reinforced concrete structures that are deteriorating because of corrosion.

The *AASHTO LRFD Bridge Design Specifications:* A Retrospective

by Dr. Henry G. Russell

The first edition of the American Association of State Highway and Transportation Officials' *AASHTO LRFD Bridge Design Specifications* was published in 1994 after 8 years of study and development. The eighth edition will be published in 2017 and will include the first reorganization of Section 5: Concrete Structures. This article reviews some of the changes introduced in the specifications from the first to the eighth editions and is based largely on the articles written by Dr. Dennis Mertz for *ASPIRE*.™

Methodology

The specifications were based on a new probabilistically based design methodology termed *load and resistance factor design* (LRFD). Although similar to the AASHTO *Standard Specifications*, which the LRFD specifications replaced in 2008, the load and resistance factors of the LRFD specifications were determined using the theory of structural reliability. The goal was to provide bridges with a target reliability index of 3.5, which corresponds to a probability of failure of 2 in 10,000.

The LRFD specifications introduced the concept of limit states for service, fatigue, strength, and extreme event design along with a new live load model. Section 5: Concrete Structures introduced a unified approach to concrete bridge design by combining the design provisions for nonprestressed and prestressed concrete members. The concept of having a parallel commentary was also adopted to provide background or additional explanation of the articles without becoming a textbook.

Shear Provisions

The first edition of the AASHTO LRFD specifications introduced the sectional design model for shear design based on the modified compression field theory (MCFT). The method involved the determination of β, a factor indicating the ability of diagonally cracked concrete to transmit tension and shear, and θ, the angle of inclination of diagonal compressive stresses. Graphs and tables were provided for their determination. Engineers and bridge owners did not readily accept the complications and iterative nature of the MCFT as presented.

This lack of acceptance led to a research project to find a simpler way to estimate shear resistance and to the introduction of a simplified method in the 2007 Interim Revisions. The simpler method was similar to that used in the AASHTO *Standard Specifications* and the American Concrete Institute approach for buildings. This method will not be included in the eighth edition.

In the 2008 Interim Revisions, the MCFT was simplified by including equations for the calculation of β and θ. This made the MCFT easier to use for both design and analysis. The tables associated with the previous method were retained in an appendix.

High-strength Concrete

The first edition of the LRFD specifications limited the concrete compressive strength to be used in design to a maximum value of 10.0 ksi unless tests are made to establish relationships with concrete strength. Subsequently, four National Cooperative Highway Research Program (NCHRP) projects addressing prestress

Dr. Dennis R. Mertz

Dr. Dennis R. Mertz, PE, professor of civil and environmental engineering and director of the Center for Innovative Bridge Engineering at the University of Delaware, died on August 12, 2016.

Mertz contributed articles about the *AASHTO LRFD Bridge Design Specifications* to every issue of *ASPIRE* from its inaugural issue in 2007 through Summer 2016. He had a tremendous knowledge of these specifications, having been a co-principal investigator for the development and writing of the first edition. Subsequently, he continued to work with the AASHTO Subcommittee on Bridges and Structures and its technical committees to advance the implementation of new technology through the development of new specification articles. This included at least 16 years with Technical Committee T-10—Concrete Design. Mertz was always there to clarify language and intent and redirect committees when their proposed changes became too complex because of their desire to be precise. He had the ability to take a complex subject and make it sound simple in both the written and spoken word. His technical presentations were always well received.

Mertz devoted himself to bridge engineering for both steel and concrete bridges, so much so that he spent his 2003 sabbatical at the Florida Department of Transportation helping to coalesce its design and load rating procedures. He loved conceptualizing complex, interdependent variables. His involvement in the activities of the National Academies included participation in many National Cooperative Highway Research Program projects and membership in several Transportation Research Board committees.

Mertz was the founding editor of the American Society of Civil Engineers' *Journal of Bridge Engineering*. He received many awards for his contributions to the bridge industry. Earlier this year, he was the recipient of the International Bridge Conference John A. Roebling Medal, which recognizes an individual for lifetime achievement in bridge engineering.

When asked why Mertz should be selected to write for *ASPIRE*, John Dick—the magazine's first executive editor—responded, "There is no better person to write on behalf of concrete bridges than someone known for his work on steel bridges." Mertz's contributions to *ASPIRE* have ranged from articles about shear and torsion to explaining load ratings. He kept us updated with explanations about the changes in each interim and new edition of the LRFD specifications. He was actively involved in preparing the recently approved reorganization of Section 5.

These brief articles in *ASPIRE* provide us with a legacy record of what has changed over the years and why. They will be available to bridge engineers for years to come when nobody can remember why an article on the specifications was written in the first place.

Thank you, Dennis, for your many important contributions and for a job well done.

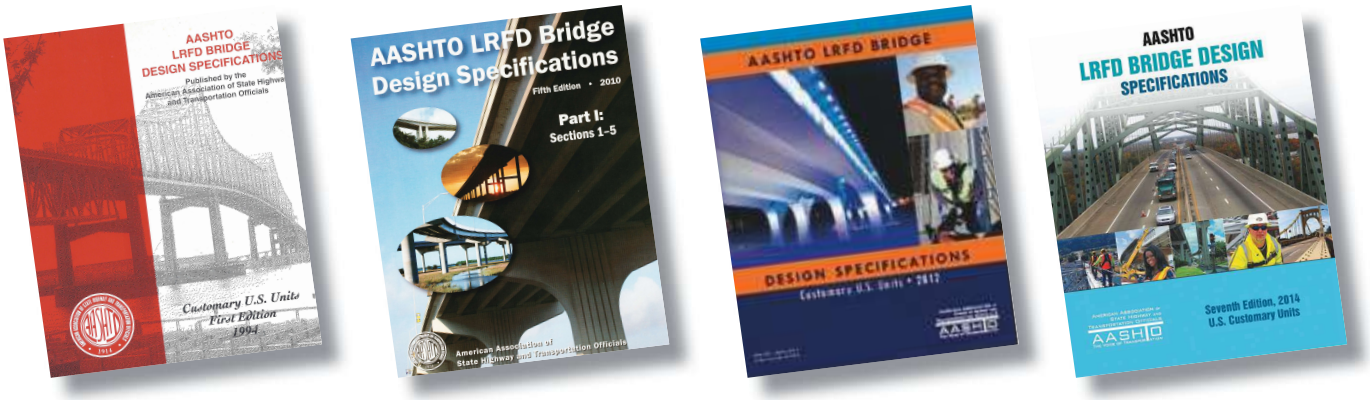

Several editions of the AASHTO LRFD Bridge Design Specifications.

losses, shear design, development lengths, and design for flexure and axial load were initiated to investigate the use of higher-strength concretes. Over a period of several years, the results of the research were implemented in the specifications to permit concrete compressive strengths up to 15.0 ksi for many design provisions.

High-strength Reinforcement

The first edition of the LRFD specifications limited the yield stress to be used in design for nonprestressed reinforcement to a maximum value of 75.0 ksi. The 2013 Interim Revisions extended the minimum yield strength for use in design to 100.0 ksi for most nonseismic bridge applications without significant changes to the LRFD design philosophy and methodology.

Lightweight Concrete

The 2016 Interim Revisions included a comprehensive revision of the articles related to lightweight concrete based on Federal Highway Administration and NCHRP research projects. The definition of lightweight concrete was extended up to an equilibrium density of 0.135 kip/ft^3, which is considered the lower limit for normalweight concrete. The terms *sand-lightweight concrete* and *all-lightweight concrete* were removed. Instead, a concrete density modification factor λ was introduced to modify various traditional resistance equations, stress limits, and development lengths based on the concrete unit weight. The shear strength reduction factor for lightweight concrete was set equal to the factor for normal-weight concrete.

Strut-and-tie Modeling

The first edition of the AASHTO LRFD specifications introduced a limited amount of procedures for strut-and-tie modeling. The 2016 Interim Revisions provided a complete rewrite of this material. The rewrite was based on an examination of previous tests; additional large-scale, deep beam tests; and a comparison of current AASHTO provisions with those used in Europe for many years.