ASPIRE®
THE CONCRETE BRIDGE MAGAZINE
SUMMER 2019
www.aspirebridge.org

Salesforce Transit Center Bus Ramp Bridge

San Francisco, California

INTERSTATE 15/U.S. ROUTE 95 HIGH-OCCUPANCY VEHICLE CONNECTOR BRIDGE

Las Vegas, Nevada

GILMAN DRIVE OVERCROSSING AT THE UNIVERSITY OF CALIFORNIA

San Diego, California

Presorted Standard
Postage Paid
Lebanon Junction, KY
Permit No. 567

PCI Precast/Prestressed Concrete Institute

CONTENTS

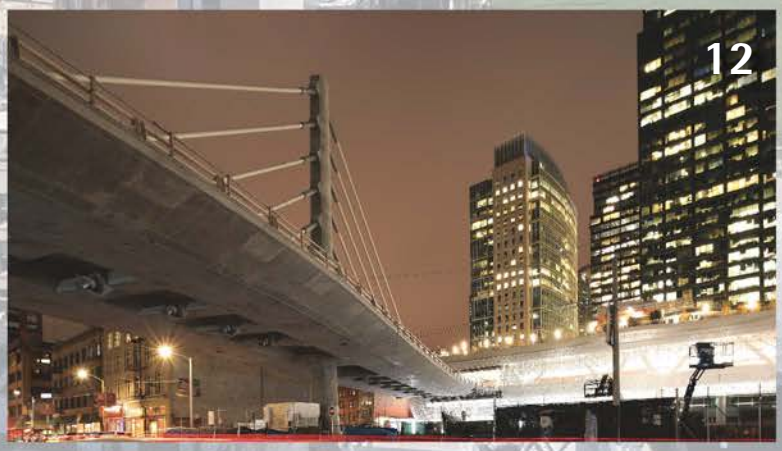

Photo: Arup.

Photo: Kiewit Corporation.

Photo: Paul Turang.

Features

Departments

Photo: Steve Proehl.

Advertisers' Index

EDITORIAL

Photo: PCI.

Is our industry ready to attract new talent? It's time to make over career paths in construction

William N. Nickas, *Editor-in-Chief*

By the end of this year, I will have taught 60 National Highway Institute classes on prestressed concrete bridge superstructures, and I have found that the sidebar discussions with consultants and state highway officials are just as interesting as the curriculum. One question that I have heard repeatedly over the last 13 years, in every one of the 38 states where I have taught, is "How can we attract and retain staff?"

This question is a call to action. To hire and retain the best staff, the bridge community needs to emulate other industries that are creating career paths to help workers move from low-skill to highly skilled opportunities. To do this, we must better define midlevel skilled workforce positions and open doors to the training, education, and credible certifications that can lead to lucrative, lifelong careers for engineers, designers, technicians, construction managers, construction tradespeople, and inspectors. And, yes, we'll need to be prepared to offer better pay for trained staff who enjoy our industry.

Section 529 of the U.S. Internal Revenue Code provides tax advantages to individuals investing in savings plans designated to be used to attend colleges and universities. Senator Steve Daines of Montana is sponsoring a bill to expand the options for using such 529 plans, allowing skilled workers to use funds to pay for enrollment in registered, high-quality programs that provide advanced training such as apprenticeships.[1] Senator Daines and others say that this proposed change to the tax code could be the boost needed to help match workers with jobs in the skilled trades.

Given the influences of technology on our economy, the careers associated with our construction delivery systems are going to need a fresh look to remain desirable to the next generation. In some economic sectors, technological shifts are leading to fewer job opportunities. According to the U.S. Bureau of Labor Statistics, the U.S. Post Office will be losing 13% of its positions in the next decade, with much of that job loss being due to automation. Alternatively, in the same period, we can expect job opportunities across all construction classifications to grow at a rate of between 6% and 13% (see **Table 1**).[2]

Technology changes are creating new job types all around us. Unfortunately, the newest middle-skilled jobs do not always provide stable employment or help millennial-generation workers climb a career ladder. To attract and retain skilled employees, we need to ensure that new jobs are as stable as possible and allow for career advancement. Let's design up-to-date career paths with current à la carte lists. Let's also support the dedicated members of our bridge community by establishing a model curriculum, including a list of tools (publications, training, and even certifications) to help individuals climb the career ladder. By investing in training, we can allow young men and women to succeed in the trades and build a stronger country and community.

Technological shifts are leading to fewer job opportunities.

In my editorial in the last issue of *ASPIRE*®, I discussed changing infrastructure needs and artificial intelligence (AI) trends, and their anticipated impact on bridges. Bridges are an expensive feature of the human habitat, and new asset management measures are underway, with a push toward using Big Data and AI to lower operational costs and extend the service lives of bridges.

The future will certainly bring new career classifications to the bridge community. In this issue, Dr. Joey Hartmann from the Federal Highway Administration offers insights about how truck loads and vehicular operations are being viewed in truck platoon scenario modeling as policy makers move

Editor-in-Chief
William N. Nickas • wnickas@pci.org

Managing Technical Editor
Dr. Reid W. Castrodale

Technical Editor
Dr. Krista M. Brown

Program Manager
Nancy Turner • nturner@pci.org

Associate Editor
Emily B. Lorenz • elorenz@pci.org

Copy Editor
Elizabeth Nishiura

Layout Design
Walt Furie

Cover
Underside of the Salesforce Transit Center Bus Ramp Bridge showing box girders, link beams, and stay anchorages. Photo: Arup.

Ad Sales
Jim Oestmann
Phone: (847) 924-5497
Fax: (847) 389-6781 • joestmann@arlpub.com

Reprints
lisa Scacco • lscacco@pci.org

Publisher
Precast/Prestressed Concrete Institute
Bob Risser, President

Postmaster: Send address changes to *ASPIRE*, 200 W. Adams St., Suite 2100, Chicago, IL 60606. Standard postage paid at Chicago, IL, and additional mailing offices.

ASPIRE (Vol. 13, No. 3), ISSN 1935-2093 is published quarterly by the Precast/Prestressed Concrete Institute.

If you have a suggestion for a project or topic to be considered for *ASPIRE*, please send an email to info@aspirebridge.org

Table 1. Outlook for selected occupational sectors of the U.S. economy[2]

Occupation	Median Income, 2018, in thousands	Number of workers, 2018, in thousands	Predicted outlook growth, 2016–2026, in thousands
Civil engineers	$86.6	303.5	+32.2 (+11%)
Civil engineering technicians except drafters	$52.5	74.5	+6.6 (+9%)
Drafters	$55.5	207.7	+14.6 (+7%)
Construction managers	$93.4	403.8	+44.8 (+11%)
Masonry workers and concrete finishers	$44.8	292.5	+34.2 (+12%)
Carpenters	$46.6	1,025.6	+83.8 (+8%)
Construction equipment operators	$47.0	426.6	+52.7 (+12%)
Construction laborer and helpers	$34.8	1,449.4	+180.5 (+12%)
Construction iron workers (structural and reinforcing)	$52.8	0.9	+11.4 (+13%)
Postal Service workers	$58.7	502.4	–65 (–13%)
Quality insurance inspectors	$38.2	520.7	–55.4 (–11%)
Robot and mechanical engineers	$87.4	288.8	+25.3 (+9%)
Welders	$41.4	404.8	+22.5 (+6%)
Industrial safety engineers	$89.1	25.9	+2.2 (+9%)
Heavy and tractor-trailer truck drivers	$43.7	1,871	+108.4 (+6%)
Overall median U.S. income	$37.7		

forward to shape the bridges of our future. Let's share that type of future-oriented discussion with the next generation to help them understand their opportunities to make a positive impact.

The future will certainly bring new career classifications

References

1. Thorsell, M. April 6, 2019. "Daines Proposes Bill to Allow College Savings Plan Money to Go to Apprenticeship Programs." KPAX News website. https://kpax.com/news/montana-news/2019/04/06/daines-proposes-bill-to-allow-college-savings-plan-money-to-go-to-apprenticeship-programs.
2. U.S. Department of Labor. 2017. Bureau of Labor Statistics Occupational Outlook Handbook. https://www.bls.gov/ooh/home.htm.

CONTRIBUTING AUTHORS

Dr. Oguzhan Bayrak is a professor at the University of Texas at Austin. Bayrak was inducted into the university's Academy of Distinguished Teachers in 2014.

Frederick Gottemoeller is an engineer and architect who specializes in the aesthetics of bridges and highways. He has advised on more than 30 award-winning bridges and has worked with several departments of transportation to improve the aesthetics of their bridge and highway programs. His book *Bridgescape* is used as a reference by many designers.

Dr. Joseph L. Hartmann is the director of the Office of Bridges and Structures for the Federal Highway Administration (FHWA) in Washington, D.C. Starting in January 2011, Hartmann served as a principal engineer and the team leader of the structural engineering team in this office, where he was responsible for the development and implementation of federal regulations, policy, and technical guidance that supported a program to improve safety and design practices at the national level.

Dr. Richard Miller is a professor of civil engineering at the University of Cincinnati. He is chair of the PCI Research and Development Council and an active member of several PCI committees, including the Bridges and Student Education Committees.

CONCRETE CALENDAR 2019–2020

For links to websites, email addresses, or telephone numbers for these events, go to www.aspirebridge.org and select the Events tab.

July 22–25, 2019
BEI–2019 (Bridge Engineering Institute Conference)
Hyatt Regency Waikiki
Honolulu, Hawaii

August 4–7, 2019
AASHTO Committee on Materials and Pavements Annual Meeting
Four Seasons Hotel Baltimore
Baltimore, Md.

August 10–11, 2019
PTI Level 1 Unbonded PT Installation Workshop
Dallas, Tex.

August 31, 2019
Deadline for submitting abstracts for fib's Concrete Structures for Resilient Society Symposium, to be held April 27–29, 2020
Shanghai, China

September 4–6, 2019
Western Bridge Engineers' Seminar
Boise Centre
Boise, Idaho

September 14–15, 2019
PTI Level 1 Unbonded PT Installation Workshop
Denver, Colo.

September 22–25, 2019
AREMA Annual Conference
Minneapolis Convention Center
Minneapolis, Minn.

September 25–28, 2019
PCI Committee Days and Technical Conference featuring the National Bridge Conference
Loews Chicago O'Hare Hotel
Rosemont, Ill.

October 1–4, 2019
PTI Committee Days
Hilton Santa Fe Historic Plaza
Santa Fe, N.Mex.

October 20–24, 2019
ACI Fall 2019 Conference
Duke Energy Convention Center &
Hyatt Regency Cincinnati
Cincinnati, Ohio

November 4–6, 2019
ASBI 31st Annual Convention and Committee Meetings
Disney's Contemporary Resort and
Grand Floridian Resort
Lake Buena Vista, Fla.

November 13–15, 2019
PTI Level 1 & 2 Multistrand and Grouted PT Specialist Workshop
Austin, Tex.

November 13–15, 2019
Second International Conference on Transportation System Resilience to Natural Hazards and Extreme Weather
State Plaza Hotel
Washington, D.C.

December 11–13, 2019
International Accelerated Bridge Construction Conference
Hyatt Regency Miami
Miami, Fla.

January 12–16, 2020
Transportation Research Board Annual Meeting
Walter E. Washington Convention Center
Washington, D.C.

February 3–7, 2020
World of Concrete
Las Vegas Convention Center
Las Vegas, Nev.

March 3–7, 2020
PCI Convention
Fort Worth Convention Center
Fort Worth, Tex.

March 29–April 2, 2020
ACI Convention and Exposition
Hyatt Regency O'Hare
Rosemont, Ill.

May 3–6, 2020
PTI 2020 Convention & Expo
Hilton Miami Downtown
Miami, Fla.

September 13–16, 2020
AREMA Annual Conference
Hilton Anatole
Dallas, Tex.

Internal Curing Concrete Becomes a Standard Practice for NYSDOT

The idea that lightweight concrete benefits from internal curing when the lightweight aggregate has been prewetted has been recognized for at least 60 years. The concept of using a relatively small quantity of prewetted lightweight fine aggregate to improve the curing of normal weight concrete mixtures began to be considered in the 1990s. By the early 2000s, the concept was being investigated more widely and benefits were demonstrated by several researchers. Some DOTs considered its use with demonstration projects, but its use has not become standard practice ... until now.

In this issue of *ASPIRE*®, Duane Carpenter with the New York State Department of Transportation (NYSDOT) reports that internal curing concrete is now being required for decks on all continuous span bridges. Internal curing concrete uses prewetted lightweight aggregate to replace a portion (in this case 30%) of the conventional fine aggregate (sand) in a high-performance concrete bridge deck mixture with an equal volume of prewetted lightweight fine aggregate. After the Department used internal curing concrete for twenty demonstration projects, they found that internal curing with prewetted lightweight aggregate significantly reduced deck cracking. Duane also reports that contractors found that the internal curing concrete was easier to finish because it was less sticky that a conventional mix. Section 5.1.2 of the NYSDOT *Bridge Manual* states that internal curing concrete provides curing moisture to the interior of the deck which cannot be reached by externally applied curing water because of the low permeability of high-performance concrete, and that it may allow a reduction in duration of wet curing for decks.

This policy change for NYSDOT represents a major step forward in the transportation community toward the implementation of internal curing using prewetted lightweight aggregate, as this appears to be the first Department of Transportation (DOT) in the U.S. to require use of internal curing for decks on all continuous span bridges.

Photo credit: Duane Carpenter and Matthew Royce

www.escsi.org

ESCSI
Expanded Shale, Clay and Slate Institute
Rotary Kiln Structural Lightweight Aggregate

Concrete Micromanagement

DRP, a Twining Company, employs a growing array of high-tech instruments and advanced analytics to help extend the service lives of bridges.

by Craig A. Shutt

The field of concrete petrography, the microscopic study of concrete's composition and the related quality and durability issues, has grown in significance for the design, construction, and maintenance of concrete bridges. Concrete petrographers analyze new and existing concrete infrastructure to provide information that engineers can use to formulate repair and maintenance options to extend the service life of structures.

DRP, a Twining Company based in Boulder, Colo., has been at the forefront of advances in concrete petrography. "Bridge owners have limited funds to address an overall aging infrastructure, and they must fully understand the condition of the materials in their bridges to know how best to address repairs," explains David Rothstein, DRP's president and founder.

"Advanced expertise is required to understand what investigative methods will work most effectively to get engineers the information they need to repair or rehabilitate a structure," he states. "The only thing worse than not repairing a weakened bridge is to spend time and money on a repair without recognizing the real problem and having the repair fail."

'The only thing worse than not repairing a weakened bridge is to spend time and money on a repair without recognizing the real problem and having the repair fail.'

Rothstein began his consulting work in 1996 and has seen the field become more analytical, precise, and valuable (for more on DRP's history, see the sidebar to this article). "Our strength is that we take a very close look at a small part of the elephant to help owners and engineers understand what is really happening," he says. "We understand we're one piece in the bigger picture—but it's an important piece."

Quantifying Observations

DRP's goal is to quantify evaluative observations with more precision. "The trend is definitely toward providing more quantitative measurements," says Rothstein. "A lot of work in this field has been based on descriptions, and engineers are not wild about descriptions. They prefer numbers."

A recent innovation is fluorescence microscopy, which the firm has been actively using since 2018. DRP's concrete petrographers are now able to use thin sections containing epoxy with fluorescent dye to view the cement paste's microstructure. This technique produces objective measurements of the capillary porosity of the paste, which generally shows a strong correlation with water-to-cement ratio. The brightness of the green fluorescent tone in an area is proportional to the amount of epoxy infiltrating the material. A void (essentially 100% porosity) will be bright green, and a dense aggregate such as quartz (0% porosity) will be black.

"There was a learning curve with the equipment; it's not just a plug-and-play system," Rothstein says. "We

A concrete slab polished and impregnated with fluorescent epoxy and photographed under ultraviolet light. The bright-green areas show cracks and voids; the cracking is due to a combination of alkali-silica reaction and freezing-and-thawing damage. All Figures and Photos: DRP, a Twining Company.

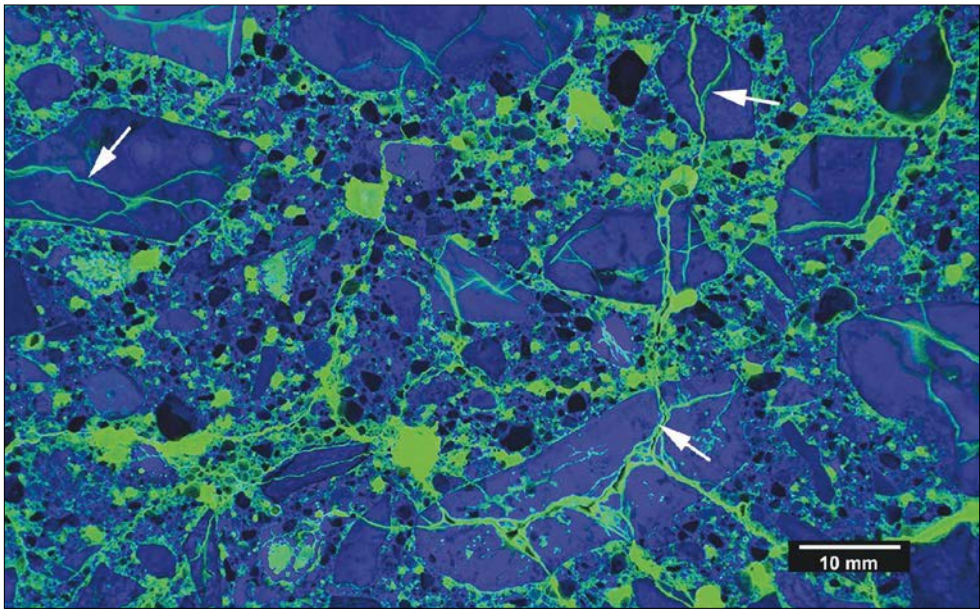

can combine this technique with image analysis to provide more robust, quantitative measurements of capillary porosity," he explains. "It allows us to measure on a pixel-by-pixel basis the capillary porosity of the concrete. That allows us to evaluate quantitatively how various aspects of the construction process, ranging from consolidation to finishing to curing, affect the microstructure of concrete."

Understanding ASR and DEF

DRP's petrography services can evaluate alkali-silica reaction (ASR) and delayed ettringite formation (DEF), chemical reactions that produce secondary deposits within concrete long after it is put into service. DRP uses a high-resolution scanning electron microscope to determine whether concrete has DEF or ASR. The deposits that fill microcracks resemble gel in both cases, and both mechanisms can occur together.

The presence of ASR may indicate that the concrete is distressed. However, the significance of ASR is not necessarily as great as many engineers think.

"ASR is pretty straightforward to recognize and can be common, but the key is to know what it means when you find it," Rothstein explains. "Cracks are often noticed when grime accumulates in them or something else attracts attention. It's very common to have ASR in a 25-year-old structure without having any structural problems. Our forte is looking beyond the mere presence of ASR to determine whether performance is being affected. That's really what matters."

'ASR is pretty straightforward to recognize and can be common, but the key is to know what it means when you find it.'

With DEF, the reactive components are in the cement paste, rather than the aggregate. The reactions lead to the formation of secondary deposits that consist of ettringite. This mineral contains water, which lies at the root of any deterioration mechanism. "Although we have worked with concrete affected by DEF, it is a rare phenomenon and is encountered much less frequently than ASR," Rothstein says.

Thorough analysis of ASR and DEF helps engineers choose a course of action (see articles in the Summer 2018 and Spring 2019 issues of *ASPIRE*®). Often, monitoring a structure and using sealers are the best responses to ASR, Rothstein says. "They're cheap ways to extend the service life of the bridge without overreacting to the existence of ASR. They're low-tech options, but they can have a big impact."

"Most elements that are isolated from sources of moisture can be repaired," Rothstein says. The goal with any repair is to control water, usually through proper drainage and protection of porosity. Fiber wraps, waterproofing, and other options can provide sufficient protection. "If you can cut off the water's penetration, you stop any durability issue and life cycles can be extended."

'Most elements that are isolated from sources of moisture can be repaired.'

Combatting Deicer Damage

DRP is also doing research on methods to limit the damage caused by chloride-based deicing chemicals, which can cause premature deterioration around joints. "The damage manifests as both cracks that form parallel to joint walls and as microcracking along the joint walls that causes raveling," explains Chunyu (Joe) Qiao, a senior petrographer with DRP.

Qiao has been part of a research team exploring the formation of calcium oxychloride, a secondary compound

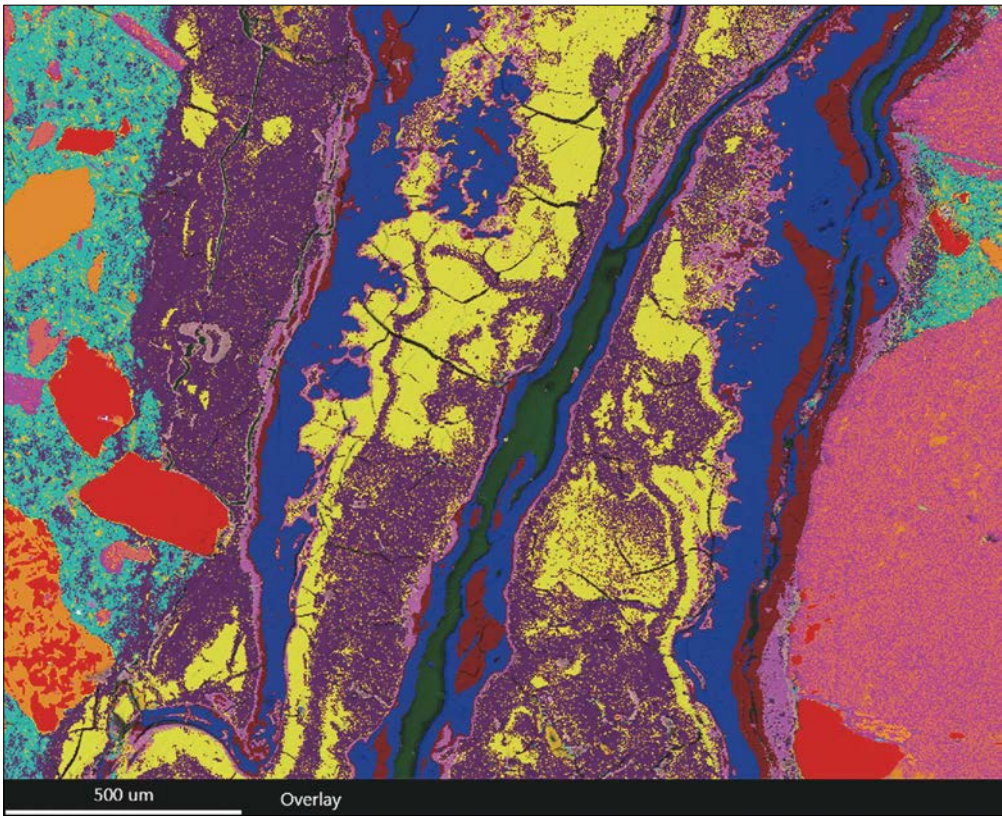

An energy dispersive spectroscopy phase map of a sample taken from a concrete seawall in southern California. Petrographic analysis showed that cracking due to alkali-silica reaction (ASR) was present in the distressed section but not in other areas, even though similar aggregates were used. ASR gel (purple and yellow), along with brucite (blue) and magnesium-silicate-hydrate (reddish brown), indicated marine-water infiltration. The analysis showed seawater had elevated the alkali content only in one area, allowing repairs to be made to retain the entire seawall's integrity.

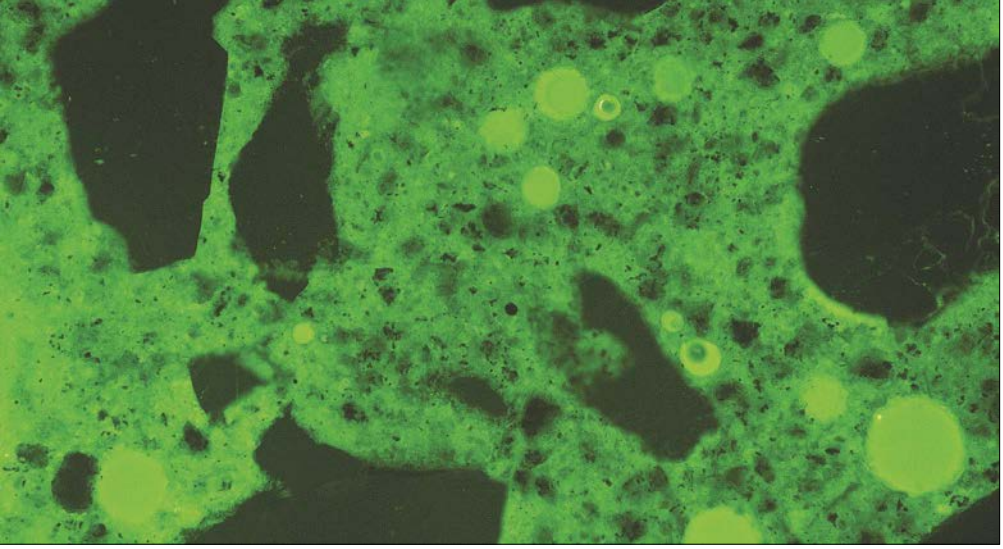

A transmitted fluorescent-light photomicrograph showing detail of the cement paste in a thin section. The bright-green circles are air voids that have 100% porosity, and the black areas are aggregate particles with essentially 0% porosity. The variations between these colors represent variations in the paste's capillary porosity.

that can form just above the freezing point of water and damage concrete. "The infiltration of chlorides is not only a problem for spurring joint rot and concrete deterioration but also a concern for steel reinforcement and corrosion," he says. The group is currently evaluating solutions to protect concrete from these salts.

Estimating Service Life Using Formation Factors

Another area of innovation for DRP involves the use of formation factors to estimate the service life left in an existing bridge. "In the concrete construction industry, formation factor is a relatively new and fresh topic, and it's growing in popularity and understanding," Qiao says. "It's becoming an important evaluation tool for us."

Determining a formation factor is a process that was developed by the petroleum industry in the 1940s and is now being adapted to evaluate both new and in-service concrete mixtures. The factor is a result of measuring the resistivity of a porous material and quantitatively relating it to the material's transport properties. "The concrete industry has struggled to find methods that provide a simple way to measure the transport properties relevant to the durability and service life of hardened concrete," Qiao explains. "Direct measurements of concrete permeability and chloride transport are difficult, requiring extended periods of time and complex testing apparatus." Also, ASTM International doesn't offer a method to measure chloride transport directly, and most current methods, such as the rapid chloride penetrability test (ASTM C1202), are subject to experimental artifacts, such as unintended heating.

The formation factor is solely related to the microstructure and transport properties of the concrete specimen. Therefore, a "formation factor provides a simple and quantitative way to obtain more robust information regarding transport properties, and the industry is moving—albeit slowly—toward adopting the formation factor," Qiao says. "Its key benefit is that it provides an easily measured but robust parameter that can be plugged into various service-life models."

'Formation factor provides a simple and quantitative way to obtain more robust information regarding transport properties.'

Best of all, the formation factor can be determined by a simple procedure known as the "bucket test," which has been introduced to the American Association of State Highway and Transportation Officials and some departments of transportation for review. In essence, a concrete cylinder is placed in a saltwater bath with a known composition. The cylinder is left in the bath for a period (typically 14 to 28 days) so that the composition of the pore solution of the concrete cylinder equilibrates with that of the bath.

After this conditioning, the concrete's electrical resistivity is measured periodically. The resistivity reflects the transport properties of the material. "The formation factor tells us how well the pores are connected, which influences the rate of penetration of aggressive agents like chloride," Rothstein says.

"We need more measurements to confirm that the results are as promising as they appear," Qiao says. "The potential is great. Concrete compositions vary so much that we need to find a way to standardize the results when we measure them."

Formation factor is developing into a critical evaluation tool for DRP, Rothstein says. "We think it's the path to helping the industry extend service life, by helping to standardize measurements so we're all on the same page. Owners have different approaches, and they want a numerical result that will indicate the remaining service life. This will work for everyone if we can prove it is robust, consistent, and reliable."

Looking Forward

DRP is a future-oriented company. It plans to continue its work with fluorescence microscopy and formation factor, along with using other tools and techniques to characterize the condition of concrete for clients. "We need to do more outreach to explain techniques and educate clients. We also encourage owners, engineers, contractors, and producers—everyone involved in concrete construction—to get involved with the American Concrete Institute, the Precast/Prestressed Concrete Institute, and other technical societies to learn the latest advancements in concrete properties and techniques."

DRP also plans to more than double its 2000-ft^2 existing facility to 5500 ft^2 and to add more capabilities and services, in part to help evaluate and solidify its work on formation factor. This progression was enhanced in 2017, when DRP was acquired by Twining Inc., a construction engineering, inspection, and testing firm that has been in business more than 100 years. The acquisition gives DRP the capability to develop a wider range of testing

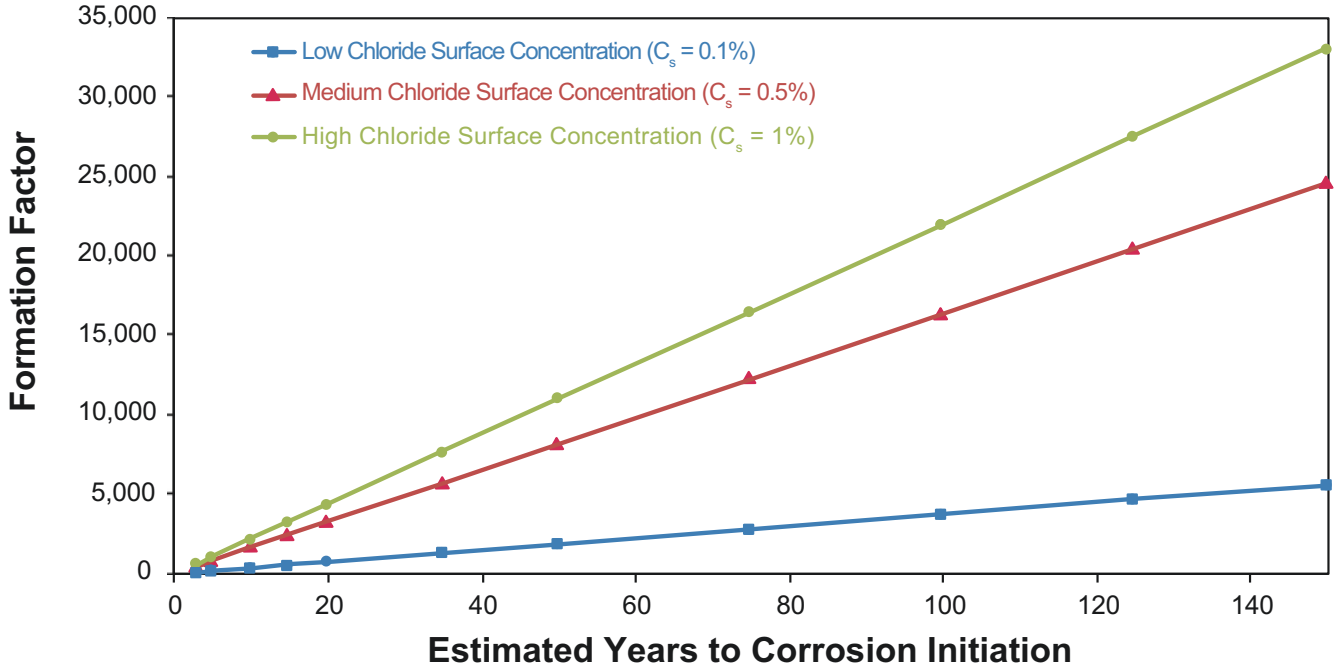

An example of the relationship between formation factor and predicted service life. Note: C_s = the concentration of chlorides in solutions in contact with concrete. Figure developed from an approach described by Spragg.[1,2]

capabilities and expertise, and helps the firm to attain access to potential clients in California, where Twining is based.

"We had been courted in the past as a potential partner, but we never considered such offers seriously until we began a conversation with Twining," Rothstein says. "They continually push at the forefront of the industry, refining existing strengths and services, and developing new capabilities and expertise. This is exactly the kind of organization that we want to align with."

The potential for growth as new challenges arise keeps DRP engaged and looking to the future. "We're always finding new ideas and stumbling upon new anomalies that need to be examined and understood," Rothstein says. "The industry continues to create new aggregates, new mix designs, new admixtures, and new questions we need to answer. That's what keeps it fun."

'We're always finding new ideas and stumbling upon new anomalies that need to be examined and understood.'

References

1. Spragg, R.P. 2017. "Development of Concrete Performance Specifications that Include Formation Factor." PhD dissertation, Purdue University, West Lafayette, IN.
2. Weiss, W.J., R.P. Spragg, O.B. Isgor, M.T. Ley, and T. Van Dam. 2017. "Toward Performance Specifications for Concrete: Linking Resistivity, RCPT and Diffusion Predictions Using the Formation Factor for Use in Specifications," In: *Proceedings*. fib Symposium 2017, International Federation for Structural Concrete, Maastricht, The Netherlands.

DRP Grows, Evolves

DRP Consulting Inc. (David Rothstein Petrographic Consulting) was founded in 1996 by David Rothstein after he earned a PhD in geology at the University of California, Los Angeles, and was asked to analyze the types of aggregate in a client's quarry. In 1999, he began postdoctoral studies at Northwestern University in Evanston, Ill., while continuing his consulting business.

In 2001, Rothstein moved to Boulder, Colo., to work on concrete structures of all types. In 2009, he hired an assistant to handle sample preparation, then an administrative assistant to handle paperwork, and then two more petrographers. Today, the firm employs six people and is a subsidiary of Twining Inc. of Long Beach, Calif.

EDITOR'S NOTE

See the FHWA article on Performance Engineered Mixtures (PEM) in the Fall 2017 issue of ASPIRE *for more discussion of the formation factor and other innovative approaches to ensure a longer service life for concrete structures.*

Aesthetics in Public Works

by Frederick Gottemoeller

Yes, we are in Pittsburgh. Photo: Frederick Gottemoeller.

The symbol of Pittsburgh constructed from LEGO® pieces. Photo: Frederick Gottemoeller.

Last summer, my wife and I took our younger grandson on a tour of Pittsburgh, Pa. The big attraction was the dinosaur exhibit at the Carnegie Museum of Natural History. Of course, Pittsburgh is also known for its bridges, with more than 400 sizable bridges in and around the city. The decorator of our hotel must have had that reputation in mind when selecting an image of one of those bridges, the Roberto Clemente Bridge, to place on a wall in our room. The next day, we discovered that the Carnegie Science Center was hosting a LEGO® exhibit. That is a not-to-be-missed event if you are 8 years old. So, of course, we went. When we arrived, we found that the exhibit contained a LEGO® model of the very same bridge.

Of the hundreds of bridges in Pittsburgh, why did both the hotel decorator and the LEGO® modeler pick the Roberto Clemente Bridge, which is neither the largest nor the most prominent bridge in the area? The answer is that this particular bridge has so captured the imagination of residents and visitors alike that it has become a widely recognized symbol of Pittsburgh the city. Being one of three identical bridges that cross the Alleghany River in downtown Pittsburgh reinforces the impression this bridge makes. That impression could have been quite different.

In 1926, when the decision was made to build these three bridges, Allegheny County's Bureau of Bridges put forward the then-accepted standard design for bridges of this size: through Pratt trusses. However, Pittsburgh's Commission of Fine Arts objected, arguing that three identical through-truss bridges would block views of the downtown and mimic every other city's bridges. Pittsburgh deserved better. So, the Bureau of Bridges was given a new set of *aesthetic* criteria for the project. It went back to the drawing board to find a distinctive and memorable design that would not block views of downtown.

To its credit, the bureau chose an innovative bridge type that satisfied these criteria, the self-anchored suspension bridge. The design met the difficult navigation clearance requirements of the sites while creating three memorable bridges. These bridges cost more than the trusses would have, but did the additional cost create an offsetting value for the public?

Now, 93 years later, the decisions of the hotel decorator and the LEGO® modeler suggest that the investment *has* paid off. The civic value of the three bridges is demonstrated by their current names. They recognize two of Pittsburgh's famous sons, baseball player Roberto Clemente (Sixth Street) and artist Andy Warhol (Seventh Street), and

The Roberto Clemente Bridge spanning the Allegheny River in Pittsburgh, Pa. Photo: Nathan Holth, HistoricBridges.org.

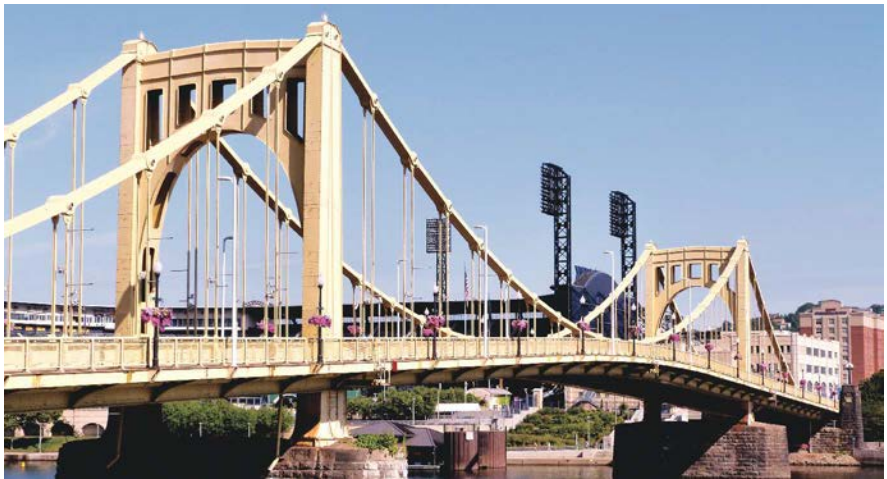

one famous daughter, environmental scientist Rachel Carson (Ninth Street). As a result of the additional initial investment in aesthetics, these three bridges have provided many years of recognition and pleasure for Pittsburgh.

What lessons might we take from this story? First, that the currently accepted standard design solution is not always the best option. It can be tempting to assume that what worked best for the previous five bridges will work best for the sixth. In fact, each bridge is distinctive, and designers need to be afforded the time to think through the distinctions, both functional and aesthetic, and develop their proposals accordingly. That process is called "conceptual design," and it is the time when innovation and creativity take place. It is the process that the Bureau of Bridges short-changed when it proposed three through-truss structures for the Allegheny River.

Second, the story emphasizes that bridges inevitably become powerful symbols. Their functional importance and visual prominence make sure of that. To put it another way: bridges span physical barriers and connect previously separated people and places. Many bridges possess immense symbolic importance. Their design can also represent a region's or a culture's creativity, wealth, and ambitions. Public decision makers, with the participation of their citizenry, must decide what values they want their bridges and other symbols to convey. If they decide, through a legitimate public decision-making process, to devote public funds to expressions of aesthetic quality, that choice becomes as legitimate a use of public funds as any other.

When improved aesthetic quality is established as a goal, the resulting concept may require a greater investment compared to a standard solution. Does that mean that spending even more money will ensure even better results? Not necessarily.

In 2007, Columbus, Ohio, decided to replace two historic but deteriorating bridges crossing the Scioto River in the city's center. The goal was to build "signature" bridges, whose distinctive appearances would instantly symbolize the spirit of Columbus. The City set generous budgets of $26 million for each bridge.

The first bridge to be replaced, at Main Street, was built for $44 million.

For the design of the second bridge at Rich Street (formerly Town Street), the City turned to a team that included me. As a starting point, the City directed that our concept have no above-the-deck elements that would block views of the Main Street Bridge. The city also asked us to come up with a concept that would cost less than the Main Street Bridge and that could be built quickly, in time for the city's bicentennial celebration. Finally, the City made it clear that we were still expected to deliver a signature design, one that would complement both the Main Street Bridge, just 600 ft downstream, and the Broad Street Bridge, 600 ft upstream.

Responding to these conditions required an extensive conceptual design process. Early on, we realized that we could make small adjustments in the alignment of Rich Street that would significantly simplify the bridge's geometry, thus allowing for the economical use of custom precast concrete elements. With that in mind, we and the City agreed to a revised budget of $14 million.

In the final design, 68 precast concrete pieces were post-tensioned together to form the four lines of gracefully tapered arches that support the bridge. The Rich Street Bridge, which is almost exactly the same width and length as the Main Street Bridge, was built for $13 million. Given the cost pressures when the Main Street project exceeded its budget, the City might have insisted we settle for a standard prestressed concrete girder solution. However, by giving us an opportunity to do proper conceptual design, the City allowed us to come up with an innovative application of precast concrete that produced a signature bridge within the revised budget and in time for the bicentennial.

By focusing on *both* economy and aesthetic quality, we achieved a bridge that met the City's aesthetic objectives but cost significantly less than the Main Street Bridge.

When public funds are spent for aesthetics (or for any other purpose), the public is entitled to know that they are getting maximum value for their money. To achieve that goal, the aesthetic value that each feature brings to the bridge must be weighed against its cost. That assessment is admittedly subjective, but the ability to make such judgments with discernment and pragmatism is the basis of aesthetic success in public works. The designer's goal must be to create the maximum aesthetic bang for each public buck.

References

1. ASCE Pittsburgh Section 100th Anniversary Publication Committee. 2018. *Engineering Pittsburgh: A History of Roads, Rails, Canals, Bridges, and More*. Charleston, SC: History Press.
2. Gottemoeller, F., J. Shanks, and T. Butz. 2013. "The Design and Construction of the Rich Street Bridge over the Scioto River." In *Proceedings*, 2013 National Bridge Conference Chicago, IL: Precast/Prestressed Concrete Institute.

The Rich Street Bridge in the "postcard view" of downtown Columbus, Ohio. Photo: Randall Scheiber.

SALESFORCE TRANSIT CENTER BUS RAMP BRIDGE

by Qiyu Liu, Arup

The Salesforce Transit Center (STC) is a regional transit hub located in the heart of San Francisco, Calif. The multilevel hub connects San Francisco with the Bay Area counties through 10 transit systems and will be a station for California High-Speed Rail. As part of this visionary, $6 billon project that is transforming downtown San Francisco and the Bay Area regional transportation system, a new 1849.0-ft-long Transbay bus ramp bridge system was built to provide bus transit access to the STC from the East Bay via the San Francisco–Oakland Bay Bridge exit ramp. The Transbay Ramp Bridge is the first vehicular cable-stayed bridge built in California.

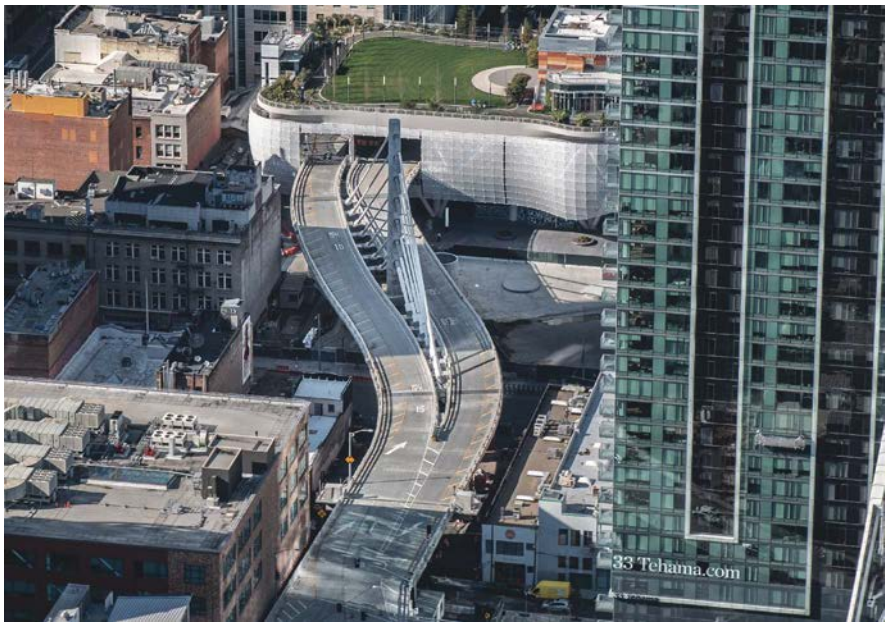

Aerial view of Salesforce Transit Center (STC) and the cable-stayed bridge that connects the second level of the STC to the viaduct-style bus ramp bridge system leading to the East Bay. Photo: Steve Proehl..

Urban Congestion and Seismic Risks

The STC is located in a densely populated area surrounded by high-rise buildings. The bus ramp bridge connects to the second floor of the STC multilevel building and spans over a multistory underground structure composed of a local street roof, a vehicle/bicycle ramp at the first below-grade level, a concourse at the next level, and the future California High-Speed Rail underground station at the lowest level. This configuration severely limited the location of the bridge piers and foundations.

The high seismicity in the Bay Area also posed design challenges. The bridge piers and foundations were located outside of the STC structural footprint to avoid dynamic seismic interactions between the STC underground structure and the bridge and to eliminate any interference between the bridge and STC structure and foundations.

For the connection between the viaduct and the STC, a cantilever cable-stayed bridge was determined to be the best design option in terms of costs and aesthetics. With this configuration, large columns and foundations for the bridge in the STC underground structure were eliminated, and the seismic behavior and design of the bridge were greatly simplified. This article discusses the design of the cable-stayed bridge portion of the bus ramp bridge system.

Aesthetic Compatibility with the STC

Project leaders wanted the bus ramp bridge to have an aesthetic design that would complement the perforated steel,

profile

SALESFORCE TRANSIT CENTER BUS RAMP BRIDGE / SAN FRANCISCO, CALIFORNIA

BRIDGE DESIGN ENGINEER: Arup, San Francisco, Calif.

CONSTRUCTION ENGINEER: OPAC Consulting Engineers Inc., San Francisco, Calif.

PRIME CONTRACTOR: Shimmick Construction, Oakland, Calif.

STAY-CABLE CONTRACTOR: VSL/Structural Technologies, Fort Worth, Tex.

POST-TENSIONING CONTRACTOR: Schwager Davis Inc., San Jose, Calif.

The bus ramp cable-stayed bridge at night with box girders, link beams, and stay anchorages visible. Photo: Arup.

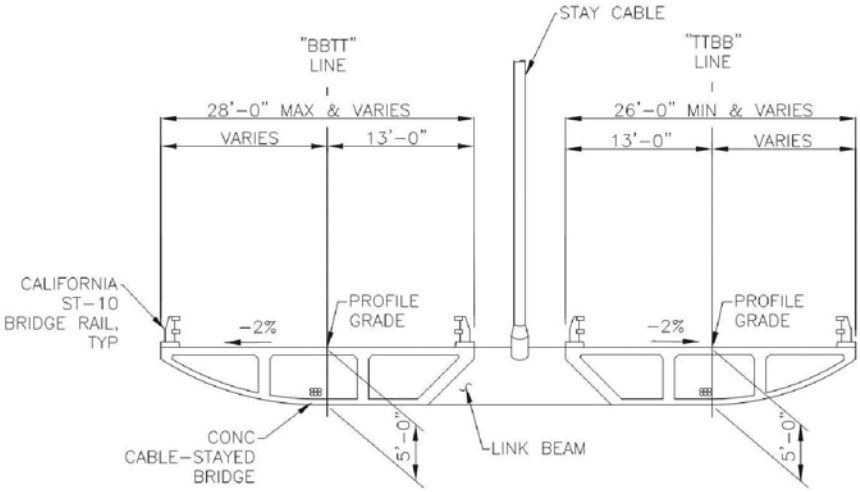

Typical cross section of the cable-stayed bridge deck showing the ladder-beam system, link beams, and stay anchors. All Figures: Arup.

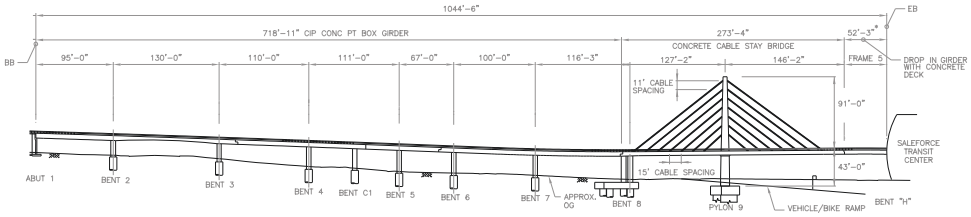

Elevation of the bus ramp bridge system with the cable-stayed bridge and Salesforce Transit Center at the right end.

curved facade of the STC. To avoid overpowering the appearance of the STC building, a single plane of stay cables supported by a slender concrete tower was proposed for the cable-supported bridge. The bridge deck is a ladder-beam system supported by stay cables anchored in the middle of the transverse link beams. A curved outside web surface in the box girders was adopted so the ladder beams would match the curved facade of the STC. The cable-stayed bridge design allowed for a flexible superstructure with shallow box girders that enhance the bridge's overall aesthetics.

The cantilever bridge was designed to support a maximum of four lanes of fully loaded bus traffic. It was necessary to strictly control the deflection of the cantilevered end to provide comfort for bus passengers. Relatively large stay cables were designed to control the required deck deflections—109 parallel 0.6-in.-diameter strands were used. To achieve a slender tower design, cable saddle boxes were used instead of typical individual stay anchorages, thus avoiding the need for access space inside the tower.

TRANSBAY JOINT POWERS AUTHORITY, OWNER

BRIDGE DESCRIPTION: A 1849.0-ft-long viaduct and cable-stayed bridge to provide dedicated bus transit access between the Salesforce Transit Center and the San Francisco–Oakland Bay Bridge. The 273.33-ft-long cable-stayed bridge consists of a 127.17-ft-long back span and a146.17-ft-long concrete cantilever span with a 52.25 ft simply supported drop-in span that connects the bus ramp viaduct to the second story of the Salesforce Transit Center structure. Post-tensioning was used in the transverse direction in all link beams.

STRUCTURAL COMPONENTS: The cable-stayed bridge has a dual concrete box-girder superstructure connected transversely with concrete link beams. The link beams are supported by stay cables and a solid concrete pylon that extends 91 ft above the deck. Stay saddles were used at the pylon, which is supported by two 200-ft-deep slurry walls founded on bedrock. The end bent at the backspan is supported on four 5-ft-diameter drilled shafts founded on bedrock.

BRIDGE CONSTRUCTION COST: $59.7 million

AWARD: *ENR* California Best Projects 2018: Airport/Transit.

Another aerial view of the cable-stayed bridge as it enters the Salesforce Transit Center. Photo: Steve Proehl.

Innovative Structural Arrangements

The cable-stayed bridge is a side-by-side deck, single-tower structure. The main span consists of a 146.17-ft cantilever span over a park above the future underground train station. A 52.25 ft drop-in span over a local street was used to further reduce the weight imposed by the bridge on the SCT's supporting columns. The 127.17-ft-long back span is positioned over Howard Street. To limit live-load deflection of the cantilever span, a 91-ft-high concrete tower (from the deck to the top) is used with a single plane of cables along the centerline of the bridge deck.

The ladder-frame system of the bridge deck was constructed from two concrete box girders rigidly connected by a series of concrete link beams. To provide sufficient torsional rigidity of the ladder frame, the spacing of the link beams is set at 15 ft in the back span and 16.5 ft in the cantilever span.

The tower and the end pier are monolithically connected to the deck. This arrangement not only minimizes future maintenance work in this area but also enhances torsional rigidity of the ladder frame, which provides additional resistance to unbalanced live load and lateral seismic load in the transverse direction of the bridge.

The tower is supported on two 200-ft-deep slurry walls founded on bedrock. The end pier is supported on four 5-ft-diameter drilled shafts. Post-tensioned bars are used in the end pier columns to resist tension from the stay cables during different loading conditions.

Technical Challenges

The structural isolation of the cable-stayed bridge from the STC added complexity to the design of the expansion joint between the cable-stayed bridge and the drop-in span. The expansion joint should allow for movement in all directions, and the free end of the bridge is expected to move more than 2 ft in the transverse direction during a seismic event. A modular type of expansion joint with dovetail-shaped joist boxes was chosen so that the free end can move in both longitudinal and transverse directions.

AESTHETICS **COMMENTARY**

by Frederick Gottemoeller

According to the project profile, the Salesforce Transit Center is intended to be a visionary project that will transform downtown San Francisco. Thousands of people will be moving through the center every day on foot, or by bicycle, car, or bus on their way to or from their bus or train. The quality of their experiences will be an important factor in whether they judge the center to be a success. They will be moving through sidewalk and street spaces whose "ceiling" is the underside of the bus ramp bridge. Therefore, the bridge's appearance from below is its most important aesthetic feature.

The designers have recognized this fact in both their overall conception of the bridge and in the structure's details. The choice of a cable-stayed structural system was driven largely by the limited space for foundations, but it also constrained the number of vertical supporting elements below the bridge. That keeps open the sight lines through the structure, making the area below seem safer and more spacious. The concrete box girders conceal all of their internal bracing and provide a smooth, light-colored reflective surface overhead, while their curved outer webs allow daylight to penetrate under the bridge. The curved webs also make it difficult to judge the actual depth of the structure, so the bridge seems thinner than it really is. Finally, using cable saddle boxes instead of individual stay anchorages at the tower keeps the tower relatively thin and in proportion with the rest of the bridge.

But the designers' real stroke of genius was leaving the median open and exposing the ladder-frame system of the bridge deck. This design brings daylight into the space under the bridge, while showing off the structural elements of the system. The role of the tower in supporting the stays and the roles of the stays in supporting the deck are crystal clear. The elegant stay-link beam intersection and simple stay-anchorage detail make their roles even more obvious.

Inserted among numerous 50-story skyscrapers, and adjoining the five-block-long Salesforce Transit Center, the bus ramp bridge can't compete with its neighbors on size. However, by borrowing from the curved-surface vocabulary of the transit center, the bridge's dramatic and carefully detailed shape certainly competes on elegance. The bridge will become a well-known and popular landmark in this urban scene, and a captivating lesson on how bridges work.

Underside of the bridge showing box girders, link beams, and stay anchorages. Photo: Arup.

Aerial view of the cable-stayed bridge deck, soffit, and pylon during construction. Photo: Arup.

Another challenge was managing the curved alignment of the bridge. Given the site constraints, the alignment of the bridge is an S-curve, which is extremely rare in a cable-stayed roadway bridge.

A third challenge was the design of the pylon. The stay cables at the highest elevation created significant bending moment in the tower because of the long moment arm. Every effort was made to straighten the bridge alignment; however, when the curve could not be removed, the tower and its foundation were designed to have high flexural strengths in the transverse direction.

Conclusion

When faced with significant design challenges related to the bridge's location and tight right-of-way, engineers and architects collaborated to find innovative solutions that could meet the project requirements. The bridge was completed and opened to bus traffic in September 2018.

Qiyu Liu is an associate principal with Arup in San Francisco, Calif.

PROJECT

Flying Over Las Vegas

Interstate 15/U.S. Route 95 High-Occupancy Vehicle Connector Bridge

by Daniel Baker and Nick Eggen, HDR Engineering Inc.

Project Neon's signature bridge is the high-occupancy vehicle connector flyover in Las Vegas, Nev. All Photos: Kiewit Corporation.

For nearly 20 years, the Nevada Department of Transportation has been planning and preparing for the largest and most expensive public works project ever constructed in the state. In the fall of 2015, Project Neon was officially awarded under a design-build contract, and its design phase began shortly thereafter. An important component of Project Neon, the widening and reconstruction of 3.7 miles of Interstate 15 (I-15) between Sahara Avenue and the U.S. Route 95 (U.S. 95) interchange, is currently nearing completion. This stretch of interstate is currently the busiest portion of roadway in Nevada, serving over 300,000 vehicles per day.

Installation of the reinforcement cage for a 11-ft 6-in.-diameter drilled shaft, located in the median of U.S. Route 95. Shafts were more than 100 ft deep in several locations.

Geometry for the Project's Signature Bridge

Included in this $600 million project is the "signature" high-occupancy vehicle (HOV) connector bridge, an 18-span, 2600-ft-long flyover structure that directly connects the new HOV lanes between U.S. 95 and I-15 in the heart of Las Vegas. The bridge begins and ends on a tangent alignment and completes a greater than 90-degree left-hand turn on an 875 ft radius. The structure's entrance and exit are in the center medians of each arterial, all while crossing I-15, U.S. 95, Martin Luther King (MLK) Boulevard, and several other ramps. Superelevation varies drastically throughout the length of the structure. On the I-15 side, the bridge has a 3% right-down superelevation and quickly makes a full reversal to an 8% left-down superelevation, which is held constant throughout the main portion of the curve. Near U.S. 95, the superelevation transitions again, finishing in a 2% crown over the last several spans. While the bridge superelevation makes a full reversal and crown break, the profile rises from I-15 at a 5% grade before reaching a plateau at a 0.5% slope. Finally, the flyover drops from the sky at a 6% grade to tie back into U.S. 95.

profile

INTERSTATE 15/U.S. ROUTE 95 HIGH OCCUPANCY VEHICLE CONNECTOR BRIDGE / LAS VEGAS, NEVADA

BRIDGE DESIGN ENGINEER: HDR Engineering Inc., Coeur d'Alene, Idaho

PRIME CONTRACTOR: Kiewit, Omaha, Neb.

PRECASTERS: TPAC, Phoenix, Ariz. (girders) —a PCI-certified producer; Precast Management, Las Vegas, Nev. (precast deck panels)

POST-TENSIONING CONTRACTOR: DYWIDAG-Systems International, Long Beach, Calif.

DRILLED SHAFT SUPPLIER: Hayward Baker, Hanover, Md.

A hammerhead pier configuration was selected for pier locations where possible. Pier caps are 61 ft wide and 11 ft deep over the columns. The cast-in-place concrete caps are conventionally reinforced.

Considering the required bridge geometry, the search to find the most efficient bridge design possible for the structure began during the project pursuit phase. Designers recognized that optimizing individual elements could have a compounding effect that would lead to an overall more efficient system.

Pushing Boundaries to Find Superstructure Efficiencies

Finding the most efficient girder shape, concrete strength, frame layout, and girder spacing (and resulting number of girder lines) was paramount to achieving the most efficient structure possible. The bridge superstructure consists of six 3-span frames composed of California wide-flange (CAWF) precast concrete girders made continuous for live load. The girders are spaced at a remarkable 13 ft 7.5 in. The girders are arranged along chords of the 875-ft-radius horizontal curve between piers. Because of the curved edge of the bridge deck, there are variable deck overhangs. Spans range in length between 124 and 162 ft, for a total bridge length of 2606 ft. Two CAWF girder sizes, 66 in. and 84 in., are used on the bridge structure, and each type of girder uses high-strength (10 ksi), self-consolidating concrete. The overall depth of the superstructure varies with span and according to haunch requirements. In general, the depths are about 8 ft 6 in.

One of the two straddle bents on the project, which are critical aspects of the bridge layout. To keep span lengths reasonable so precast concrete girders could be used, straddle bents were required to span more than 100 feet over each mainline arterial.

The bridge is 62 ft wide with a 9.5-in.-thick deck. The deck is composed of a 4-in.-thick partial-depth precast concrete deck panel and a 5.5-in.-thick cast-in-place topping slab. Because of the climate in the Las Vegas area, standard plain reinforcing bars are used for the entire project; epoxy-coated reinforcing steel or other methods of corrosion protection are simply not needed.

Substructure Optimization

In addition to seeking an efficient superstructure design, designers were challenged to find the most economical substructure layout feasible given the geotechnical conditions of the site and surrounding geometric constraints. Efficiency came in the form of conventionally reinforced, single-column hammerhead piers. Column heights range between 13 ft 0 in. and 60 ft 5 in. throughout the length of the bridge. Most columns are rectangular in cross section and measure 7 ft by 10 ft, with 1 ft corner chamfers. However, two exceptions to this pier size were made where the bridge alignment crosses I-15 and U.S. 95 at extreme skews. In these locations, post-tensioned (PT) straddle bents were used to achieve reasonable superstructure span lengths given the chosen girder types. The PT straddle caps are 8 ft 6 in. wide by 11 ft 6 in. deep and include 12 PT ducts, each with thirty-one 0.6-in.-diameter strands, for a total initial post-tensioning force of 16,000 kip. These straddle bents, which span 106 ft 0 in. over I-15 and 104 ft 6 in. over U.S. 95, are supported by 8-ft-square columns, with 1 ft corner chamfers. Because of the large amounts of post-tensioning in the caps, tensioning was completed in stages to ensure that temporary concrete stresses remained within the limitations of American Association of State Highway and Transportation Officials' *AASHTO LRFD Bridge Design Specifications*.

Drilled Shafts—What Lies Beneath

In the original concept, the foundation design included groups of small-diameter shafts with a typical cap

NEVADA DEPARTMENT OF TRANSPORTATION, OWNER

BRIDGE DESCRIPTION: An 18-span, 2600-ft-long curved flyover bridge that uses precast, prestressed concrete girders placed on chords, partial-depth precast concrete deck panels, post-tensioned straddle bents, and drilled-shaft foundations.

STRUCTURAL COMPONENTS: Ninety California wide-flange precast, prestressed concrete girders; 4-in.-thick partial-depth precast concrete deck panels composite with a 5.5-in.-thick cast-in-place concrete deck; conventionally reinforced single-column hammerhead piers; two post-tensioned concrete straddle bents; and 11.5-ft-diameter drilled shafts

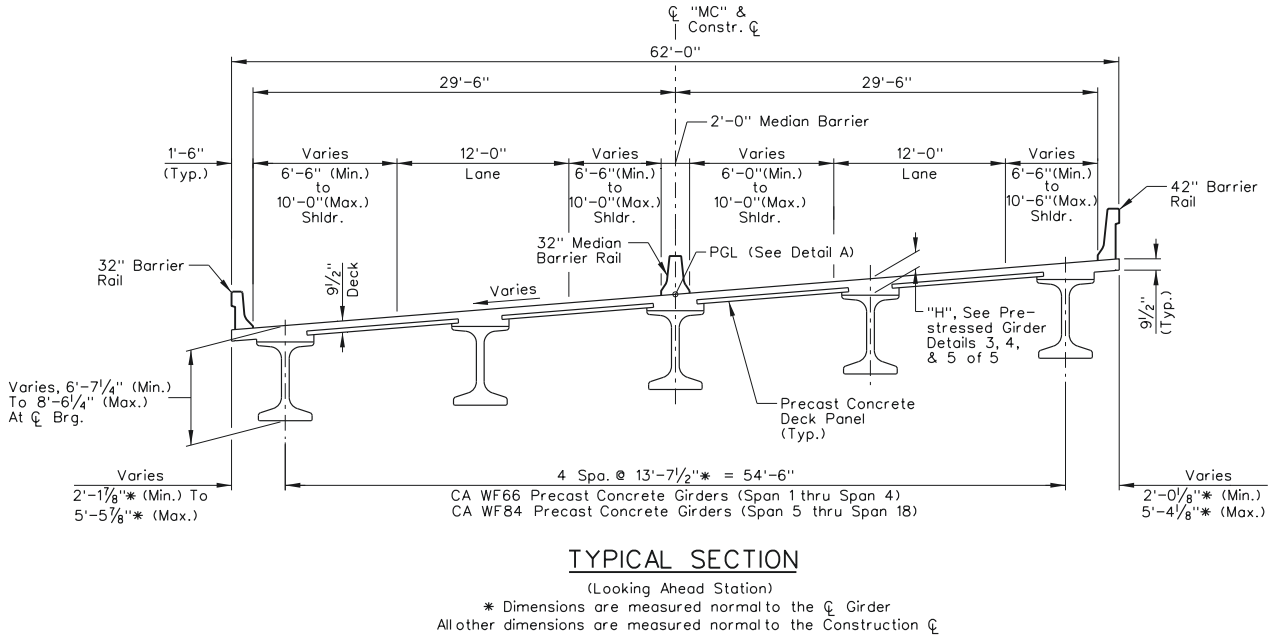

A typical section of the HOV connector flyover bridge. Chorded precast concrete girders spaced at 13 ft 7½ in. highlight the efficiencies realized in the project design. Precast, prestressed partial-depth concrete deck panels contribute construction-related efficiency for the bridge superstructure.

footing supporting each column. This design was soon revised during the pursuit phase of the project to use a single, large-diameter drilled shaft for each column. The single, large-diameter drilled shaft was more economical than the shaft groups for this application. Additionally, in pinched areas where the flyover departs or ties in with I-15 and U.S. 95, the single-shaft configuration provided a clear geometric solution that would significantly reduce the structure's impact during construction on the adjacent roadway and the general public.

To support the typical 7 ft by 10 ft column and provide adequate reinforcement clearances between the column and the drilled-shaft reinforcement cages, drilled shafts were oversized by 1 ft 6 in., resulting in a diameter of 11 ft 6 in. Shaft lengths typically range between approximately 70 and 100 ft, with a few shafts in excess of 100 ft deep.

The design of the drilled shafts for the structure is controlled by axial demands. However, the single-shaft configuration provides a significant contribution to overall lateral flexibility of the bridge. The consequences of this flexibility for the design of the overall structure are both adverse (p-delta effects) and beneficial (a higher seismic period leads to lower accelerations). Even after consideration of the detrimental effects, the single-shaft configuration provided clear economic and geometric benefits to the bridge design. As these drilled shafts were constructed, their size and scale made quite an impression on observers.

The Final Puzzle Piece

The largest efficiency realized for the structure was the simplest—making the bridge shorter. This concept required the most "outside of the box" thinking on the project. The original HOV connector concept called for a total structure length of 4668 ft. To reduce the bridge length to 2600 ft would require a drastic change to the point where the flyover landed within U.S. 95. Because of a width restriction between existing bridges over MLK Boulevard, the HOV concept structure remained in a viaduct configuration until the U.S. 95 split was wide enough to land the HOV lanes in the center median. This original conceptual design resulted in a structure length extending for more than 2000 ft past MLK Boulevard.

The resolution of this issue was linked to the existing northwest ramp direct-connect bridge, an adjacent flyover bridge that landed on the west side of MLK Boulevard. This bridge was not originally scoped to be modified or replaced. However, the design team noticed that if the last frame of the existing bridge were realigned and reconstructed, it would create sufficient width to shift the U.S. 95 northbound structure far enough to the north so that the HOV connector flyover could touch down just to the west of MLK Boulevard. This innovation eliminated more than 2000 ft of bridge when compared to the base concept, resulting in roughly $20 million in savings. This concept was made possible by the alternative technical concept process within the design-build delivery model. Without this avenue for change, this type of innovation would not likely be realized or put into action.

Design Smart

Project Neon's HOV connector flyover bridge is a shining example of the benefits of using standard concrete bridge elements while also pushing the boundaries of what is possible for a precast concrete girder bridge. Often, the most economical design can be found by leveraging individual element efficiencies to create a compounding effect that significantly reduces the structure's costs for the client and general public. For more information on this project, see the Concrete Bridge Technology article in this issue of *ASPIRE*®.

Daniel Baker and Nick Eggen are bridge engineers for HDR Engineering Inc., in the Coeur d'Alene, Idaho, and Las Vegas, Nev., offices, respectively.

PROJECT

Gilman Drive Overcrossing at the University of California San Diego

by Dr. Tony Sánchez,
Systra-International Bridge Technologies

Completed Gilman Drive Overcrossing at the University of California San Diego. Photo: Paul Turang.

On February 7, 2019, representatives of University of California San Diego (UCSD), San Diego Association of Governments (SANDAG), and California Department of Transportation (Caltrans) cut the ribbon on the Gilman Drive Overcrossing, a bridge that had been in the campus plan for over 40 years. The structure completes the campus loop and provides a second crossing over busy Interstate 5 (I-5).

Background

Founded in 1960, UCSD is a university known for its cutting-edge research. In the 1970s, Caltrans built the I-5 freeway and an overcrossing at Voigt Drive to service the small campus.

By 2011, the campus had grown to almost 40,000 students, and a new crossing at Gilman Drive was needed. UCSD and its design team, led by Moffatt & Nichol, partnered with Caltrans and SANDAG to develop a new bridge for this location.

Design Goals and Process

The stakeholders agreed that the structure would need to be functional and cost-effective, and its design should have a strong character that would be compatible with the world-class architecture on campus.

The project goals led the design team to propose a concrete arch. The simple lines of an arch are beautiful, elegant, and timeless. The arch has been used for thousands of years and is one of the most robust structural forms. The funicular shape produces axial compression under uniform gravity loads—the type of internal loads for which concrete is ideally suited. A funicular structure is one that achieves an ideal equilibrium state by adopting the right form. For example, an arch under uniform gravity loads should be parabolic in shape, and, in that case, all sections of the arch will be under direct compression with no internal shear or bending forces. The arch naturally adapts to the funicular shape as loads are applied. Under self-weight or other uniform gravity loads, it takes the shape of a catenary and all sections of the cable are in direct tension, with no shear or bending. If a point load were applied, its shape would change to the new funicular shape for that applied loading (V-shape).

For an arch to be viable, it needs to have enough rise for an efficient shape, and the large horizontal thrusts must be resisted by the foundations; therefore, strong foundation material is needed near the ground surface. For the Gilman Drive project, the bridge deck would be almost 40 ft above the eight-lane I-5, providing an acceptable rise-to-span ratio of 1:9. Because the existing I-5 is

profile

GILMAN DRIVE OVERCROSSING / SAN DIEGO, CALIFORNIA

BRIDGE DESIGN ENGINEER: Moffatt & Nichol, San Diego, Calif.

CONSTRUCTION MANAGER/GENERAL CONTRACTOR: Mid-Coast Transit Constructors, a joint venture of Stacy and Witbeck, Herzog, and Skanska, San Diego, Calif.

POST-TENSIONING CONTRACTOR: DYWIDAG-Systems International, Long Beach, Calif.

OTHER CONSULTANTS: Safdie Rabines Architects, San Diego, Calif. (bridge architect); Earth Mechanics Inc., San Marcos, Calif. (geotechnical engineer)

OTHER MATERIAL SUPPLIERS: Condon-Johnson & Associates, San Diego, Calif. (micropiles); Gerdau Reinforcing Steel, San Diego, Calif. (reinforcing bars)

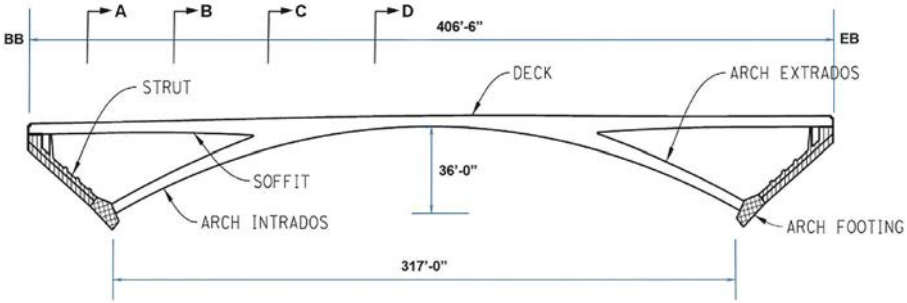

Bridge geometry. All Figures: Moffatt & Nichol.

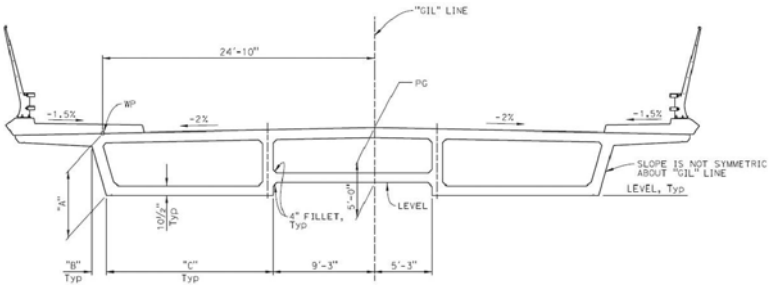

Section B-B of the box girder within the end spans of the bridge. Section A-A is similar.

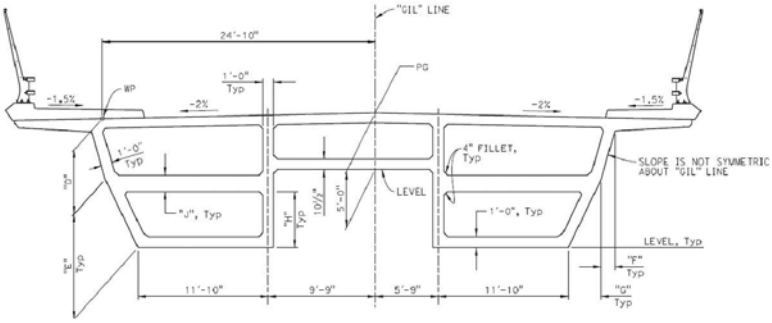

Section C-C, where the box girder meets the arch legs and the section becomes a monolithic five-cell structure.

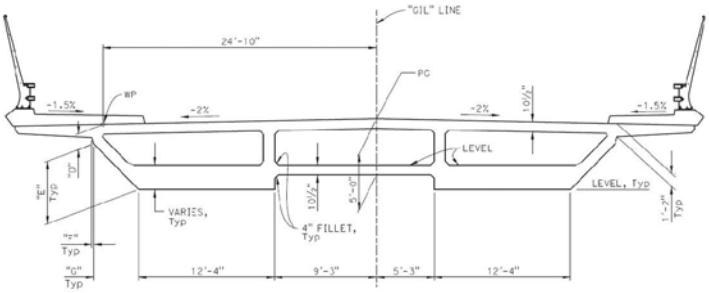

Section D-D near the arch crown, where the arch legs fade into the girder and the section becomes a three-cell box again.

in a cut section, the designers expected the foundations would be economical.

In the 1970s, Caltrans built three similar bridges in San Diego County and after over 40 years in service, they are performing well. This history gave the designers confidence they could deliver a similar concrete arch at the UCSD site.

Design Details

Visually, the bridge's form is simple. There are only two elements: the horizontal girder and the arch. Structurally, the girder spans between abutments and is supported by the arch. The designers detailed the arch and girder to fade into each other at the crown of the arch to increase the rise and reduce the visual mass at the center.

The superstructure and the arch legs are hollow box sections. The shapes are optimized, and the geometry of each component varies. For example, the girders increase in depth as they move from the abutments to arch crowns, where demands are larger. Sections A-A and B-B are similar, they look like a Caltrans three-cell box girder. In section B-B, the bottom flanges of the outer cells deepen to better resist the bending moments that increase as the girder approaches the arch. At section C-C, the girder and arch join to become a five-cell box, and at section D-D, the arch fades into the girder and becomes a monolithic three-cell box section.

The arch legs begin as 4 x 8 ft boxes. They then expand to 7.5 x 14 ft trapezoids where they join the superstructure.

To reduce the overturning on the foundations, the designers detailed a pinned connection between the arch and the foundation. The pinned connection also reduced bending at the base of the arch and allowed the

UNIVERSITY OF CALIFORNIA SAN DIEGO AND CALIFORNIA DEPARTMENT OF TRANSPORTATION, OWNERS

BRIDGE DESCRIPTION: Cast-in-place concrete arch with post-tensioned concrete box-girder superstructure, 406 ft 6 in. long, 317 ft arch span, 61 ft 8 in. wide

STRUCTURAL COMPONENTS: All components are cast-in-place concrete: four hollow arch legs, post-tensioned box-girder superstructure, pile caps, 96 micropiles (10 in. diameter), T-beam inclined struts that connect abutments to arch foundations

BRIDGE CONSTRUCTION COST: $9.5 million ($379 per square foot) for bridge items only

AWARD: Outstanding Bridge Project, American Society of Civil Engineers San Diego, 2019

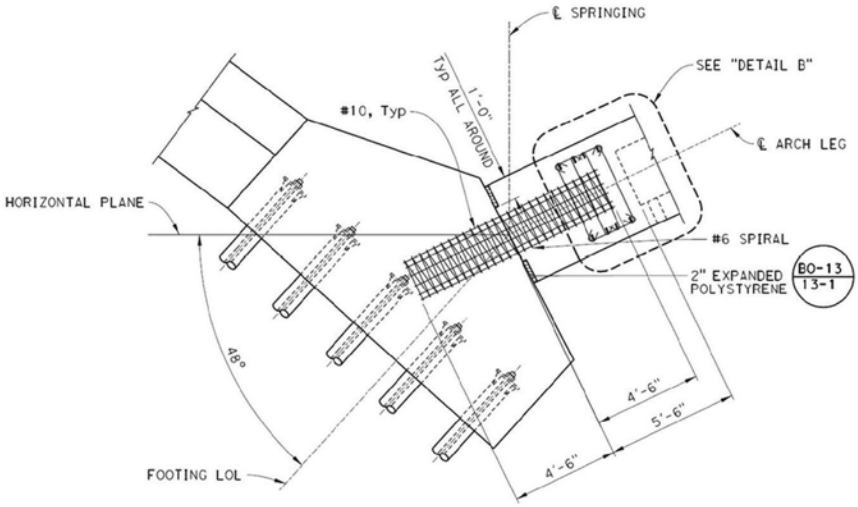

Details of the pinned connection between arch and pile cap.

designers to elegantly taper the legs. The designers adapted a Caltrans column-to-footing detail commonly used in multicolumn bents. The pinned connection for the Gilman Drive Overcrossing uses three interlocking cages of no. 10 reinforcing bars (60 bars total) confined with three no. 6 spirals at a 4 in. pitch. The outer 12 in. of the arch leg is decoupled from the foundation with a 2-in.-thick layer of polystyrene.

The bridge is supported on two foundations, one on each side of the freeway. Each foundation has a group of 48 micropiles. Each 10-in.-diameter pile is 60 ft long, with the top 20 ft encased in a steel pipe that keeps the hole open and adds bending strength. The piles are connected to a 15 x 60 ft trapezoidal pile cap, whose thickness varies from 5 to 8 ft.

Structural Innovation

The ends of the horizontal girder are connected to the arch foundations with inclined struts to increase structural efficiency. These struts transfer gravity loads down the slopes and push back against the arch. This detail reduces thrust on the foundations by 20%. Thus, the design required fewer piles, which helped reduce project costs. The inclined struts have a T-beam cross section to provide an efficient section for bending; beams were cast-in-place with the webs poured into trenches. With the inclined struts, the bridge is a hybrid between a true arch and a tied arch.

Bridge Materials

For strength and durability, the designers chose concrete for all structural components. The standard Caltrans mixture proportions and details will provide at least a 75-year design life. The cast-in-place horizontal girders are post-tensioned with a total of 12 tendons, each consisting of twenty-seven 0.6-in.-diameter strands per girder with a total initial tensioning force of 14,240 kip. The prestressing force was divided equally, with three 27-strand tendons in each web. The designers specified a minimum concrete compressive strength of 3600 psi for the pile caps and inclined struts and 5000 psi for the arch legs and superstructure.

Fiber-reinforced concrete was used for the deck to reduce shrinkage cracks and improve durability. To achieve the desired look, the designers selected integrally pigmented concrete with an earthy buff color for the abutments and a warm gray tone for the bridge. The added cost of colored concrete was approximately 2% of the cost of the concrete.

Construction and Falsework

Although the contractor built the bridge with standard Caltrans-style materials and construction methods, some of the construction procedures were modified because the bridge has a distinctive shape. For example, the bridge was cast-in-place on falsework, which is standard. However, instead of the usual three placements (columns, stem/soffit/bent cap, and deck), the contractor used 10 placements. The contractor could have used as few as five, but the concrete on the east and west sides was placed separately to better control the work.

Special lateral bracing was used to resist the unbalanced loading from placing concrete on one side at a time. Once the contractor finished placing concrete for the arch, the superstructure was built as a standard bridge.

The foundation of the arch has 48 micropiles per side. Photo: Tony Sánchez.

Arch falsework in place over Interstate 5. Photo: Tony Sánchez.

The concrete being placed for the deck in July 2018. Photo: Paul Turang.

Tony Sánchez is principal engineer with Systra-International Bridge Technologies in San Diego, Calif. Previously, he worked for Moffatt and Nichol, also in San Diego, where he was the engineer of record for the Gilman Bridge.

Interstate 49 Inner City Connector Interchange—Simplifying Complexity

by Jerry Pfuntner, FINLEY Engineering Group

The 36-mile Interstate 49 (I-49) Corridor is a four-lane highway, with a 4-ft-wide inside shoulder and a 10-ft-wide outside shoulder, that stretches from Interstate 220 (I-220) in Shreveport, La., to the Arkansas state line. Located in Caddo Parrish, La., Segment K of the project is a new interchange with four ramps connecting I-220 and I-49.The I-49/I-220 interchange ramps are the first post-tensioned, precast concrete segmental box-girder bridges constructed in Louisiana. The three segmental bridge ramps consist of 700 precast concrete segments and have 271,000 ft^2 of deck area. The three ramps present complex geometry for rural interchange, with the ramps having precast box-girder widths between 31.5 and 50.83 ft, straddle piers, cantilever piers, and horizontal curves with a minimum 550 ft radius. This article describes the measures taken to simplify the precast segmental concrete design to maximize construction efficiency, ensuring that the proposed project could compete against an alternative steel box-girder design.

First Steps

Before the first calculation was performed, the design team defined the precast concrete project in terms of constructability. Variables such as access, maintenance of traffic, and the number of segments were assessed to determine the most cost-effective solution to construct the three segmental bridge ramps.

It soon became apparent that balanced-cantilever erection with ground-based cranes would be the most economical solution for this project. With the construction method set, a conceptual design was generated to maximize design efficiency and streamline the project details. The designers decided on the concept of external continuity post-tensioning (PT) with diabolos and a combination of linearly haunched and constant-depth segments, which met the project's aesthetic goals.

Varying Ramp Geometry

The project design used a total of 700 precast concrete segments. To make this design economical, a cross section was developed that would require only one box-girder core form. If the project had required multiple segment cores, casting would have been less efficient and the costs of precast concrete segment fabrication would have been higher.

The geometric requirements for each ramp were distinctive. Ramp EN is 3070 ft long with a horizontal radius of 3500 ft. The box-girder width varies between the typical width of 42.5 ft and a maximum of 50.83 ft within a gore transition span. Ramp SE is 3300 ft long, with a box-girder width of 35.5 ft and a horizontal curve radius of 840 ft. Ramp WN is 700 ft long, with a box-girder width of 31.5 ft and a minimum horizontal curve radius of 550 ft.

To develop a box-girder cross section that would envelop such a wide range of widths and span lengths, a key part of the conceptual design involved balancing the PT details, transverse reinforcement bar sets, torsional requirements, and cantilever wing design to create a one-size-fits-all box-girder core section. Additionally, the use of external continuity tendons eliminated the integration of the blisters and internal tendons, which allowed for a smaller box core to accommodate the smaller bridge widths.

The box girders have a single core form with a linear haunch over the piers to increase the segment depth and maximize the span lengths while providing an aesthetically pleasing appearance.

External Tendons—the Right Solution for the Project

The use of external tendons for continuity

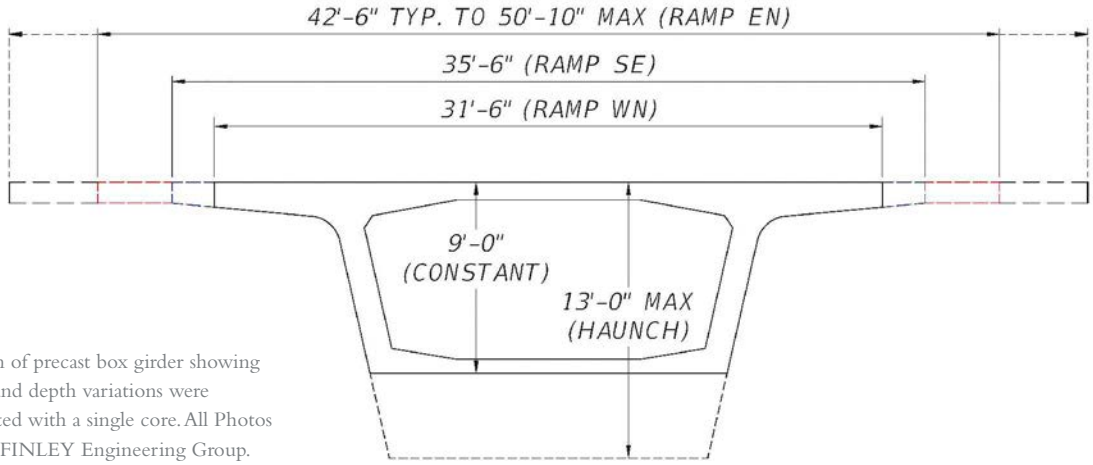

Cross section of precast box girder showing how width and depth variations were accommodated with a single core. All Photos and Figures: FINLEY Engineering Group.

PT allowed the box-girder section to be minimized, and the associated reduction in the segment weight permitted the use of a single box-girder section to achieve the required span lengths for all box-girder widths. Simplification of PT details through the use of external continuity PT reduced the continuity PT to just two deviators per span. This approach simplified casting and allowed for the smaller box-girder cross section by eliminating internal tendons in the bottom slab and generating a significant vertical shear resistance component. These details allowed the smaller box core to accommodate the Louisiana Department of Transportation and Development's live loadings.

Using Diabolos

Another critical decision that greatly simplified the PT details was the use of diabolos, which allowed for a single form void in the segment deviators to accommodate the wide range of tendon geometry for the entire project. The use of diabolos streamlined segment fabrication by eliminating the commonly used bent steel pipes that require custom fabrication for each tendon's geometry and made PT installation easier by allowing the use of a continuous (unspliced) external PT duct between the anchorage diaphragms (see the Concrete Bridge Technology article in the Fall 2015 issue of *ASPIRE*®). This simplified PT detail reduced duct installation costs, provided for a better overall quality in the production of the precast concrete segments, and required fewer and more easily accessible fabrication and inspection points, which reduced the overall effort required to produce each box-girder segment.

Conclusion

In this $670 million project, the integration of the requirements for all three ramps into a single box-girder cross section maximized design, fabrication, and construction efficiencies. The philosophy of simplifying complexity through all stages of design proved successful. The bid for the precast concrete segmental design alternate was lower than the steel alternative. The project was successfully completed October 2018.

Jerry Pfuntner is a principal with FINLEY Engineering Group in Tallahassee, Fla.

Each of the three segmental concrete box-girder ramps has a horizontal curve and a linear haunch over the piers to increase the segment depth and maximize the span lengths while providing an aesthetically pleasing appearance.

Precast concrete box-girder segments were fabricated and stored at the project site. This view of ramp EN segments was taken from ramp SE. The segment fabrication plant is at the far left of photo.

External continuity tendons within the box-girder core. The same box-girder core was used for all three of the interchange's segmental concrete ramps.

Design Considerations for Unbonded Post-Tensioning Tendons

by R. Kent Montgomery, FIGG

Post-tensioned concrete structures are economical and durable solutions for bridges and buildings. Although most designs use internal bonded post-tensioning tendons, unbonded external and internal tendons can also be utilized. However, structures with unbonded tendons exhibit fundamentally different behaviors that must be correctly addressed to produce reliable designs. This article discusses these differences while focusing on current bridge design provisions in the United States.

Types of Unbonded Tendons

For bridges, the most common type of unbonded tendon is external to the cross section, anchored at each end of a span, and deviated within the span to achieve the desired profile. In the United States, this type of tendon typically uses bare strands within ducts filled with grout to provide corrosion protection. However, in other countries, external tendons with ungrouted epoxy-coated strands and individually sheathed strands have been used. Ducts have also been filled with a flexible filler, such as wax or grease, to provide corrosion protection. Details at the deviators include rigid steel pipe ducts bonded to the diaphragm and diabolos, which are radiused openings that do not result in any bond at the deviators (see the Concrete Bridge Technology article in the Fall 2015 issue of *ASPIRE*®).

Tendons internal to the cross section are typically grouted and bonded, but they can also be unbonded. For decades, building elements have used unbonded sheathed strands and, more recently, the Florida Department of Transportation has used flexible filler for internal ducts rather than cementitious grout. The flexible filler does not bond the strands to the cross section but does provide corrosion resistance of the PT tendons (see the Concrete Bridge Technology article in the Winter 2017 issue of *ASPIRE*).

Flexural Design Considerations

At the service limit state, the designs for bonded and unbonded tendons are essentially the same. The tendons are tensioned, and forces are transferred to the cross section at the anchorages and tendon deviations. Whether the tendon is bonded or unbonded makes no appreciable difference for either the tendon forces or concrete stresses. Designing for the service limit state for both bonded and unbonded tendons involves selection of the tendon forces and tendon paths to achieve concrete stresses within the limits of the American Association of State Highway and Transportation Officials' *AASHTO LRFD Bridge Design Specifications*.[1]

However, at the strength limit state, there are fundamental differences between bonded and unbonded tendon designs. For internal tendons bonded to the cross section, strain compatibility is a reasonable assumption and the stress increase in the tendons after the section cracks can be calculated from strain compatibility and material properties. Article 5.6.3.1.1 of the AASHTO LRFD specifications presents simplified design equations that were developed using the previous considerations. These equations estimate the stress in bonded tendons at the strength limit state. Once the stress in the tendons is determined, the nominal flexural resistance is easily calculated from equations in Article 5.6.3.2 and compared to the strength limit state moment demands.

For unbonded tendons, strain compatibility is not valid and the stress in the tendons is primarily governed by global displacements of the cracked structure between bonded sections of the

External tendons in grouted ducts inside the U.S. Route 181 Harbor Bridge in Corpus Christi, Tex. Photo: FIGG.

Ungrouted epoxy-coated strands inside the Matoba Viaduct, which crosses the Matoba River in Japan. Photo: DYWIDAG-Systems International.

Tendon using flexible filler. Flexible filler can be used in both external and internal tendons. Photo: University of Florida.

tendons. Computation of tendon stresses from global displacements is sufficiently complex that Article 5.6.3.1.2 of the AASHTO LRFD specifications includes simplified equations for predicting the ultimate stress in unbonded tendons. Once the ultimate tendon stress is calculated, the nominal flexural resistance is computed using the same equations as for bonded tendons. The equations in Article 5.6.3.1.2 are based on research at the University of Texas that tested a scale model of a three-span segmental bridge with external unbonded tendons.[2] The test model used grouted external tendons running through rigid pipes in deviators to achieve the draped profile. It should be noted that, although the tendons were grouted within the pipes, some slip between the pipe and deviators was observed. Therefore, the equations are based on the tendon length between anchorages, with the effective tendon length being further dependent on the number of hinges expected to form within a given span. While the testing that was used to develop the current AASHTO LRFD specifications equations was specific to a typical span-by-span bridge of the time, it is this author's opinion that these equations provide a reasonable estimate for ultimate tendon stresses for most situations involving 100% unbonded tendons, including external tendons and internal tendons using flexible filler.

The AASHTO LRFD specifications do not provide detailed equations for cases in which both bonded and unbonded tendons exist at the same section. Rather, Article 5.6.3.1.3 provides two forms of guidance. The first is a description of a detailed analysis approach, which is conceptually correct but relatively complex. The second method conservatively uses the service level stress f_{pe} in unbonded tendons for the ultimate stress in the unbonded tendons, while using the bonded tendon equations in the AASHTO LRFD specifications to compute the ultimate stress in the bonded tendons. For this method, the size of the compression block is computed using both the bonded and unbonded tendons. It is this author's opinion that this is a reasonable method if the stress in the unbonded tendons at the strength limit state is limited to f_{pe}.

It should be noted that when both bonded and unbonded tendons are present at the same section, calculating stress increases in the unbonded tendons above the service level needs to be approached with caution. This is because the magnitude of displacements, especially the local rotations at hinge locations, required to increase the stress in unbonded tendons could possibly result in the rupture of the bonded internal tendons prior to the stress in unbonded tendons reaching the level predicted by the equations in the AASHTO LRFD specifications. This phenomenon has been noted by Brenkus and colleagues and Megally and associates and appears to be dependent on the ratio of bonded to unbonded tendons.[3,4]

Shear Design

Two methods for shear design are included in the AASHTO LRFD specifications. Neither has a requirement for the tendons to be bonded. The primary method, which is presented in Article 5.7, uses a variable angle for the inclined compressive stresses. The second method, which is found in Article 5.12.5.3.8, is based on a method discussed by Ramirez and is an alternative procedure for segmental bridges.[5] It uses a simplifying approach of a 45-degree truss diagonal and does not require a check of the longitudinal tension reinforcement for shear design.

For post-tensioned structures, either method assumes that the forces in the inclined compressive struts are equilibrated by differential forces in the longitudinal tendons. However, if the tendons are not bonded, the force in the tendons essentially remains constant between bonded sections of the tendons, which is contrary to the conceptual models used for shear design. By using a 45-degree inclination of the compressive struts, the alternative method puts less demand on the longitudinal force transfer. The research by MacGregor and colleagues at the University of Texas[2] did not directly address this anomaly, but the investigators did not note any shear capacity deficiencies in the model structure. For the primary AASHTO LRFD method, the angle of the compressive struts in the conceptual truss is typically much less than 45 degrees for prestressed concrete members and a greater demand is placed on the longitudinal force in the tendons for equilibrium. The increased demand raises questions, at least conceptually, regarding the use of these provisions in conjunction with unbonded tendons. Some research into this conceptual discrepancy has been undertaken by Vecchio and coauthors, who concluded that the primary AASHTO LRFD specifications shear design procedure is conservative.[6] Further research regarding the shear behavior of members with unbonded tendons is underway at the University of Florida and will also be studied as a part of the National Cooperative Highway Research Program Project NCHRP 12-118.

Conclusions and Recommendations

The behavior of bridges using unbonded post-tensioning tendons is fundamentally different than that of bridges with bonded tendons. Designers must take

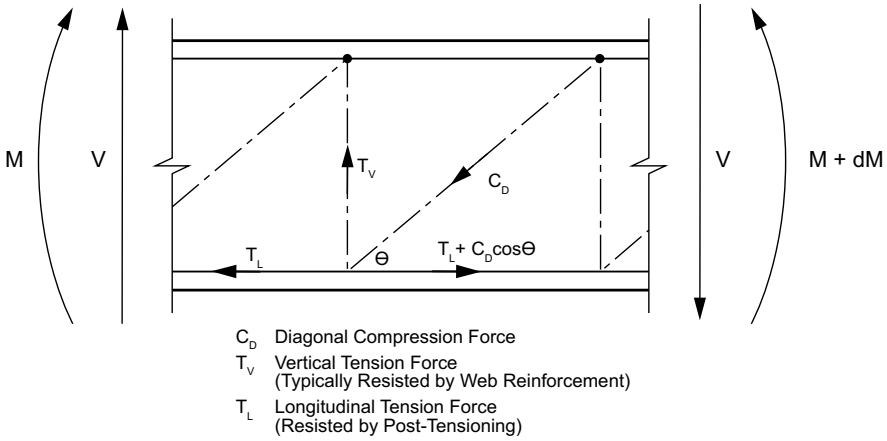

Forces in conceptual truss model illustrating differential tendon forces to equilibrate diagonal strut forces. Figure: R. Kent Montgomery.

these fundamental differences into account to correctly design structures with unbonded tendons.

While the AASHTO LRFD specifications provide a method for predicting the flexural strength of bridges with 100% bonded or 100% unbonded tendons, several issues have not been fully addressed, including the following:

- More detailed provisions in the AASHTO LRFD specifications regarding the flexural resistance of sections containing both bonded and unbonded tendons. It is this author's opinion that, although the simplified procedure wherein the stress in unbonded tendons at the strength limit state is taken as f_{pe} is conservative, refining this assumption would lead to more efficient designs.
- Research to confirm the validity of the shear design methods in the AASHTO LRFD specifications for bridges with unbonded tendons, both external and internal, including any required modifications to the current provisions.

References

1. American Association of State Highway and Transportation Officials (AASHTO). 2017. *AASHTO LRFD Bridge Design Specifications*, 8th ed. Washington, DC: AASHTO.
2. MacGregor, R.J.G, M.E. Kreger, and J.E. Breen. 1989. "Strength and ductility of a three-span externally post-tensioned segmental box girder bridge model." Center for Transportation Research Report 365-3F. Austin: University of Texas.
3. Brenkus, N. R., H.R. Hamilton, and W. A. Potter. 2017. "Flexural Strength and Hinge Behavior of Internally Post-Tensioned Members with Mixed Bonded and Unbonded Tendons." *PTI Journal* 13(2): 5–18.
4. Megally, S., F. Seible, and R. K. Dowell. 2003. "Seismic Performance of Precast Segmental Bridges: Segment-to-Segment Joints Subjected to High Flexural Moments and Low Shears." *PCI Journal* 48(2): 80-96.
5. Ramirez, J. 1995. "Shear and Torsion Design Provisions for Segmental Concrete Bridges," *ASBI Newsletter*.
6. Vecchio, F. J., P. Gauvreau, and K. Liu. 2006. "Modeling of Unbonded Post-Tensioned Concrete Beams Critical in Shear." *ACI Structural Journal* 103(1): 57–64.

R. Kent Montgomery is senior project director with FIGG in Englewood, Colo.

PCI Offers FREE New Guide Document and Training

The ***Guide Document for the Design of Curved, Spliced Precast Concrete U-Beam Bridges*** and four instructor-led training (ILT) courses present aspects of current technologies through generous references to past projects and the use of a prototype example. With the example, important aspects of curved, spliced precast concrete U-beam bridge design are discussed and presented in sufficient detail to allow competent designers to replicate and extend this technology.

The target audience of the *Guide Document for the Design of Curved, Spliced Precast Concrete U-Beam Bridges* and ILT courses comprises bridge engineers of all experience levels, owners, and contractors who are interested to learn about and deliver this developing technology. There is no cost to enroll in and complete any or all courses being taught by the contracted primary author, AECOM, or to download the new guide document.

Register for these ILT Courses Go to pci.org/PCI/Education/Webinars

Introduction, Implementation and Delivery (T350)

July 29, 2019, at 2:00 PM eastern time

This broad-based course will summarize the past history and current development of curved, spliced precast concrete U-beam bridges, primarily through reference to several projects. In addition, terminology for components used in this and later courses will be defined. An overview of project delivery, selection of design criteria, and specifying a U-beam bridge will be presented this first module.

Modeling, Analysis and Design Considerations (T353)

August 5, 2019, at 2:00 PM eastern time

The second course uses a prototype bridge to develop an understanding of the methodologies and techniques used to model, analyze, and design curved, spliced precast concrete U-beam bridges. Two submodules will be presented, as follows:

1. Assumptions and techniques to develop a structural model to analyze the bridge
2. Critical items for design during temporary phases of construction and in the permanent condition

Design Details (T356)

August 26, 2019, at 2:00 PM eastern time

Curved, spliced precast concrete U-beam bridges require component design of various details. Course three content is developed to illustrate possible details for U-beam bridges based on past plant-fabricated girders, and to provide understanding of the engineering principles for each critical element. Course attendance will enable participants to understand fundamental concepts (precast and post-tensioned) related to the design and engineering of various design details of curved, spliced precast concrete U-beam bridges.

Design Example (T358)

August 30, 2019, at 2:00 PM eastern time

The fourth course uses examples developed for the prototype curved, spliced precast concrete U-beam bridge. Detailed calculations will be presented with commentary related to the engineering of these components. References will be made to the design criteria presented in the first course.

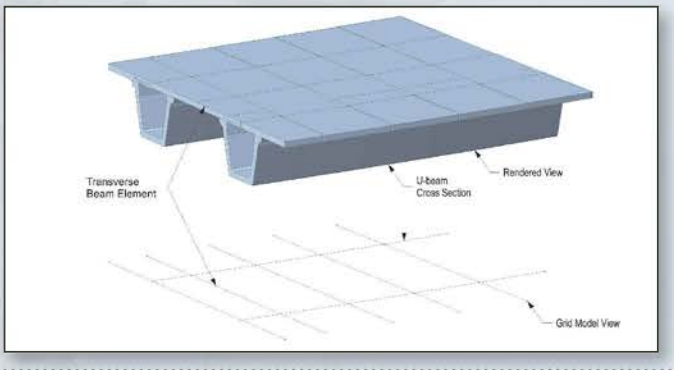

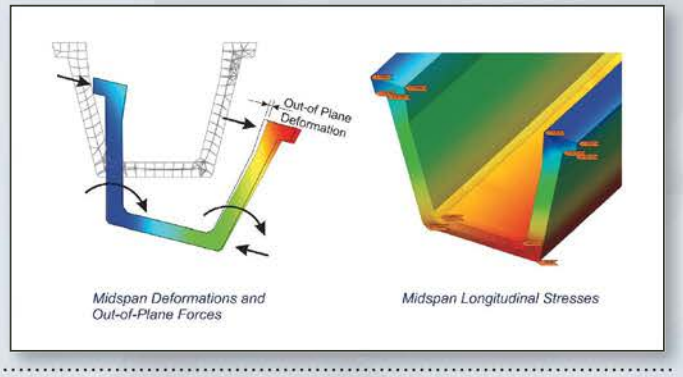

This material is disseminated under the sponsorship of the U.S. Department of Transportation in the interest of information exchange under DTFH61-13-D-00010 Task No. 5009. The U.S. Government assumes no liability for the use of the information. The U.S. Government does not endorse products or manufacturers. Trademarks or manufacturers' names appear in this material only because they are considered essential to the objective of the material. They are included for informational purposes only and are not intended to reflect a preference, approval, or endorsement of any one product or entity.

AASHTO THE VOICE OF TRANSPORTATION

PCI Precast/Prestressed Concrete Institute

Stretching the Limits of Precast Concrete

by Daniel Baker and Nick Eggen, HDR Engineering Inc.

The Nevada Department of Transportation's $600 million design-build Project Neon includes a connector flyover bridge linking high-occupancy vehicle (HOV) lanes between Interstate 15 (I-15) and U.S. Route 95 (U.S. 95) in the heart of the Las Vegas, Nev., transportation corridor. The connector bridge's geometry involves a greater than 90-degree turn in 18 spans on an 875 ft horizontal radius, all while crossing multiple alignments at severe skews. That geometric complexity might seem to dictate the use of a steel plate girder superstructure. However, the design team refused to accept the status quo and chose precast, prestressed concrete girders for the superstructure.

Chorded, precast, prestressed concrete girders provided an economical solution for Project Neon's high-occupancy vehicle connector bridge in Las Vegas, Nev. The temporary lateral girder bracing visible in in the photo was removed when the structure was completed. All Photos and Figures: Kiewit Corporation.

Three girder shapes were analyzed during the design process: the Utah bulb tee, the Idaho Transportation Department's wide-flange girder, and the California wide-flange girder (CAWF). Each shape has distinctive attributes, but all three are similar in top-flange width (approximately 4 ft 0 in.), web thickness (6 to 6.5 in.), and bottom flange width (3 ft 2 in. to 3 ft 9 in.). All three shapes can also vary in depth by 6- or 8-in. increments. However, the larger bottom flange of the CAWF shape had a distinct advantage for this project because the larger flange lowers the centroid of the section and allows for more prestressing strand to be used for design.

For the connector bridge, large amounts of prestressing were coupled with the use of 10-ksi, high-strength girder concrete to maximize design efficiency. Additional layout efficiencies were captured by making the girders continuous for composite loading through the use of continuity diaphragms at the piers. The superstructure was arranged into six 3-span frames, which balanced the positive moments in the girders to the furthest extent possible while considering span arrangement requirements.

The girders are arranged along chords of the 875-ft-radius horizontal curve between piers. Pushing the span limits of a curved bridge with chorded girders turned out to be a significant limitation in itself. Deck overhangs varied and had to be kept within manageable boundaries, which essentially limited span lengths to approximately 150 ft. Greater span lengths within the curve would create either too small of an overhang or an extremely large overhang that would require extra measures, such as transverse post-tensioning. Precast concrete girders were well-suited for this span range. High-strength, self-consolidating concrete with a design compressive strength of 10 ksi was used for the precast concrete girders. Concrete strength at transfer was designed to be as low as possible to aid in the fabrication schedule.

After the basis for the superstructure's design (girder type, maximum span lengths, frame layout, and concrete strength) was established, it was time to determine the final major design parameter—girder spacing. The 62 ft 0 in. width of the deck lent itself well to a five-girder layout using steel plate girders. This layout would have an approximate girder spacing of 13 ft 9 in. with 3 ft 6 in. overhangs. Girder spacing of this magnitude is relatively routine when steel plate girders are used. However, the design team was using precast concrete girders, and the proposed spacing of 13 ft 9 in. seemed improbable. This girder spacing was beyond that used in any of the design team's previous precast concrete girder projects.

At this point, the design team evaluated all feasible efficiency modifications. In the end, their calculations seemed to support the proposed spacing. Still skeptical, the design team searched for all possible reasons why the spacing would not work. Aside from the standard girder design calculations, engineers investigated other design issues such as deck span, girder top-flange lateral bending, and girder deflection requirements. Surprisingly, every design check came back favorable. After more analysis and optimization, designers landed on a girder spacing of 13 ft 7½ in. The design team took a deep breath and moved forward with design.

To maximize construction efficiency and reduce the amount of traditional deck formwork to be placed and stripped 60 ft in the air, stay-in-place partial-depth precast concrete deck panels were used for the deck design. Panel dimensions were standardized at 11 ft by 8 ft by 4 in. Each standard panel contains twenty-one ⅜-in.-diameter strands. Panels are

Installation of a California wide-flange (CAWF) girder at a straddle-bent location, with the neon lights of Las Vegas shining in the background. Compared with similar girder cross sections, the larger bottom flange of the CAWF shape allowed for more prestressing strands to be used.

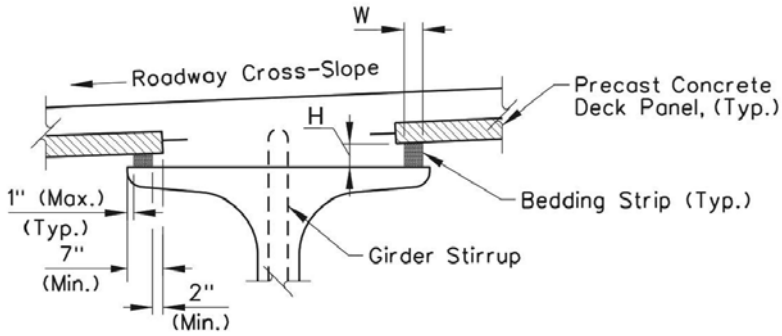

A detail of the typical support condition of the 4-in.-thick precast, prestressed concrete deck panels.

normal to the centerline of the girders, and, because of the chorded girders and the curve of the alignment, the panels needed to have a skewed end at most pier locations. This was accommodated through the use of a special skewed-panel (trapezoidal) design.

While the design of the precast concrete deck panels was simple and straightforward, the design and practical accommodation for girder haunches (or buildups) and temporary deck panel support were far from ordinary. Along with typical precast concrete girder haunch considerations, the unique aspects of the bridge, such as the large and drastically varying superelevation and the effect of chorded girder geometry, had to be evaluated. Ultimately, the design heights of camber strips ranged from a minimum of 1 in. to a maximum of 11.5 in.

Deck panel support consisted of polystyrene camber strips placed at the edges of the girder top flanges. These strips are considered temporary—edges of panels become rigidly supported once the deck and haunch have cured. Design of the polystyrene supports was limited to a maximum height-to-width ratio of 2.0; therefore, with a maximum design height of 11.5 in., the maximum actual width was approximately 6 in. To ensure that this extreme haunch height could be accommodated without loss of panel stability, full-scale testing of a sample panel and camber strip assembly was performed before the final design was completed. Furthermore, during construction, panels were connected at intermittent locations along the girder for additional temporary stability. Additional panel stability was achieved by using tie wire to connect the panel-lifting loops (at four locations on each panel) to the projecting shear stirrups in the girders.

The underlying theme for the design of the HOV connector flyover bridge can be summarized in two themes: "push boundaries" and "design smart." The design efficiencies realized on this bridge resulted in enough savings to add an additional bridge replacement to the project. This outcome offers clear benefits to the owner and general public. In times where infrastructure funding is tight and often difficult to secure, finding real and practical design efficiencies should be high on every engineer's to-do list. (For additional information on this project, see the Project article in this issue of *ASPIRE®*.)

Daniel Baker and Nick Eggen are bridge engineers for HDR Engineering Inc., in the Coeur d'Alene, Idaho, and Las Vegas, Nev., offices, respectively.

Partial-depth precast, prestressed concrete deck panels were used in the deck. The 4-in.-thick panels eliminated the need to strip deck formwork 60 ft in the air and accelerated bridge construction.

The Right Materials and the Right Quality: Important Updates to Post-Tensioning Bridge Specifications M50 and M55

by Gregory Hunsicker, OnPoint Engineering and Technology LLC, and Miroslav Vejvoda, Post-Tensioning Institute

For decades, long-span concrete bridges have relied on post-tensioning (PT) as the primary reinforcement because it enables the designer to achieve long spans and attractive, slender shapes. Two specifications represent the industry standards for PT and should be used in design and construction. The Post-Tensioning Institute (PTI) is proud to announce that the latest updates of these two specifications will be published in summer 2019:

- PTI/ASBI M50.3-19, *Specification for Multistrand and Grouted Post-Tensioning*
- PTI M55.1-19, *Specification for Grouting of Post-Tensioned Structures*

These two specifications include the newest state-of-the-art provisions and uphold the fundamental principle of construction that must be satisfied to achieve the desired performance and longevity: We must have the right materials and the right quality of work. The specifications include mandatory minimum requirements regarding materials, testing, installation, tensioning, grouting, finishing, and inspection. Commentaries provide guidance, explaining the background and showing options on how to meet the mandatory requirements.

It is important to emphasize that these specifications are prepared following American National Standards Institute requirements for a full consensus process, including public review at the end of the development process. The PTI committees producing these documents represent a wide range of interested parties, including owners (Federal Highway Administration and state departments of transportation), designers, researchers, contractors, and PT system suppliers.

All provisions or provision changes are balloted, and all negative votes are resolved by the committee consensus, as required by the PTI *Technical Committee Manual*.

A major advantage of a standard specification is that it establishes best-practice procedures and reduces or eliminates unnecessary differences in requirements of specifications developed by various designers and owners. Consistency and standardization to the new specifications help ensure that the focus in projects remains on properly executing the work using industry-established best practices.

It has been noted that some specifications are silent on important aspects of the PT system. Use of the M50 and M55 specifications helps project stakeholders address this lack of information.

In 2014 the Texas Department of Transportation (TxDOT) incorporated both standards, with a few minor modifications, into the TxDOT *Standard Specifications for Construction and Maintenance of Highways, Streets, and Bridges*. TxDOT's efforts serve as a good example of how the specifications can be adapted if the owner and designer think that some modifications are necessary for a locality or project.

PTI/ASBI M50.3-19

PTI first published the M50 specification in 2012, and PTI/ASBI M50.3-19 is the second edition. This specification was developed in cooperation with the American Segmental Bridge Institute (ASBI), which provided expertise from their membership to the the committee. The title of the specification was modified for the second edition to better reflect the scope. It is applicable to all multistrand and grouted PT for any application and in any environment. It addresses all multistrand and grouted PT issues except for the grout materials, testing, and grouting operation. Those latter items are covered in the companion specification, PTI M55, which specifically addresses grouting.

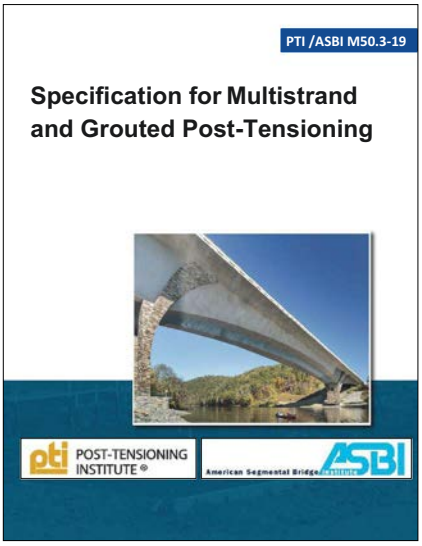

All Figures: Post-Tensioning Institute.

The M50 specification includes tendon protection levels (PLs), which simplify and standardize the selection of the PT systems and procedures by allowing the owner and designer to determine the appropriate degree of corrosion protection necessary for the PT system based on the environment of the structure, the design life, and the importance factor. The PLs provide a specific set of requirements to address the durability expectations for each level.

PTI/ASBI M50.3-19 allows for innovation by stating the testing requirements for prequalification of existing and new systems. These standard requirements will simplify the PT system prequalification. All the testing must be witnessed by a certified agency, the requirements of which are identified in the specification. The PTI PT System Prequalification Testing and Certification Program (PTI CRT-70) will be based on the M50 requirements and is expected to be launched in early 2020. The updated specification also spells out requirements for installation items, such

as tolerances, support spacing, venting of ducts, and provides time limits for important construction milestones.

PTI/ASBI M50.3-19 also addresses field personnel qualifications. Certification requirements for direct supervisors, leaders, and members of tendon installation and tensioning crews, as well as the grouting crew, are specified. Because quality is such an important part of a successful project, owners and specifiers are urged to require certified personnel. The certification training goes a long way in preventing costly errors on projects.

The following are the most significant modifications and new items in PTI/ASBI M50.3-19:

- Updates were made to reflect advances and changes in materials and testing (for example, changes to the specifications for PT ducts).
- Commentary was added to most provisions to help users navigate through the specification and to provide guidance to meet specification requirements.
- Several items related to grouting (for example, the location and details of the grout inlets and outlets) were moved to this specification from the M55 specification because they need to be addressed during the installation process. The intent is to make the two specifications complementary and avoid any potential, inadvertent conflict between them.

PTI M55.1-19

PTI M55 addresses grouting, a common, effective, and proven way to achieve strain compatibility in PT bonded tendons and provide effective corrosion protection for prestressing steel. PTI first published this specification in 2001, and each subsequent edition has included important updates. The 2012 edition received an addendum in 2013 to immediately address some issues associated with chlorides and soft grout. Those significant modifications included the following:

- Testing for chloride ion content based on the weight of the mixed grout, because the cement weight is not available for proprietary prepackaged grouts
- Prohibiting addition of any sulfates except for those already in the portland cement
- Limiting the Blaine value to be between 300 and 400 m^2/kg to address water demand fluctuations in cement supply
- Adding the inclined tube test to improve testing for bleed and segregation
- Imposing limits on constituent materials for the Class C prepackaged grouts
- Prohibiting tendon flushing to avoid residual water in the ducts
- Prohibiting aggregates and inert fillers in Class B or C grouts

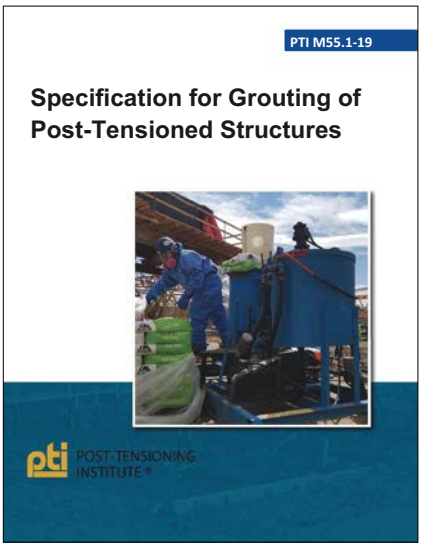

PTI M55.1-19 is the fourth edition of the specification, and it includes some far-reaching new requirements to address the reliability of grouting, such as the following:

- Certification of grout material bag weight and sampling of bag weights on site
- Certification of sulfate ion level
- Testing and documentation of the wet density at the last outlet of each tendon
- Material storage requirements
- Further clarification of the prohibition on flushing
- Updates to grouting procedures and equipment
- Requirements for personnel training, experience, and certification
- Sample grouting record and checklist (provided in an appendix)
- Postgrouting inspection requirements and recommendations
- Updates to testing procedures:
  - Robustness test to determine whether grout can meet other requirements with 110% of the maximum recommended water content
  - Volume change test: Updates to reflect practical parameters
  - Chloride ion test: Updates to procedures for independent testing for maximum chloride ion content either 0.08% by weight of portland cement or 0.03% by weight of mixed grout
  - Shelf-life test (new addition)

As these examples show, the specification applies to both the grout materials and the grouting process itself. PTI M55.1-19 is a comprehensive specification covering minimum requirements for the grout materials for each PL, including qualification testing, testing for quality control and quality assurance, field trial and mockup testing, production testing, and grouting procedures with mixing and pumping requirements. It provides detailed guidance on what a grouting plan should include and how that plan should be followed from start to completion of the work, including contingencies and repair procedures. It also addresses postgrouting inspection requirements.

Conclusion

To develop the M50 and M55 specifications, committee volunteers and others spent countless hours writing the specifications, in meetings, on the balloting process, and completing other tasks. These efforts are greatly appreciated because the specifications improve the industry and the structures in which they are used. PTI/ASBI M50.3-19 and PTI M55.1-19 represent the state of the art in material and installation requirements for multistrand and grouted PT. Whenever new findings for multistrand and grouted post-tensioning have been identified, PTI has updated these specifications to remain a reliable resource for PT materials and quality practices for bridges. For this reason, bridge owners and designers/specifiers are urged to adopt these specifications in their projects.

Gregory Hunsicker is managing member of OnPoint Engineering and Technology LLC in Dallas, Tex., and Miroslav Vejvoda is managing director, engineering and professional development, of the Post-Tensioning Institute in Farmington Hills, Mich.

EDITOR'S NOTE

The Winter 2017 issue of ASPIRE® *contains several Concrete Bridge Technology articles presenting the state-of-the art for materials, installation, grouting process, and personnel training for post-tensioning systems.*

Minnesota's MH Shape: The Development of Efficient Shallow-Depth Prestressed Concrete Beams

by Robert Hass and Arielle Ehrlich, Minnesota Department of Transportation

The Minnesota Department of Transportation (MnDOT) has been designing and building bridges using precast, prestressed concrete beams since the late 1950s. Currently, these types of structures make up 70% to 80% of the state's new bridges annually. MnDOT has worked with local fabricators to continue improving the quality and efficiency of these beams.

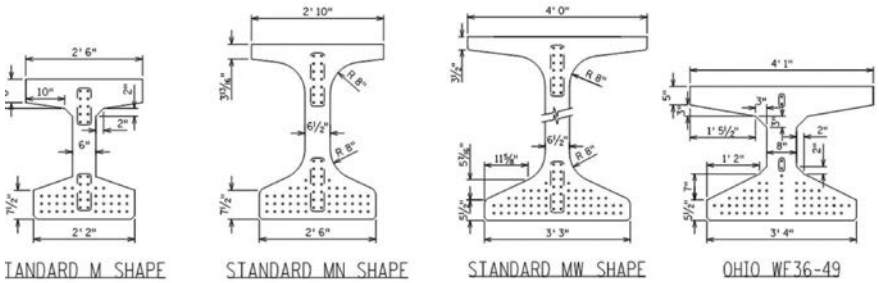

Girder cross sections considered during development of the MH girder. All Figures: Minnesota Department of Transportation.

As new two-span bridges are scoped to replace existing four-span bridges with side piers, project leaders often choose between including a grade raise of up to 18 in. or constructing the bridge with steel girders to accommodate vertical clearance requirements. Shallow concrete beams could be a more cost-effective solution. An analysis of MnDOT-owned bridges designed since 2001 and state-funded local highway bridges designed between 2009 and 2016 showed that a significant portion of bridges spanned 75 to 105 ft, with beam depths between 27 and 45 in. Through this analysis, MnDOT identified efficiency gaps in the shorter spans, and that finding led to the development of new 30-, 35-, and 40-in.-deep "MH" girders.

Shape Geometry

The study began by analyzing MnDOT's 36-in.-high prestressed concrete beam against those standardized by other states.[1] For example, Ohio uses a WF36-49 beam.[2] Combined with a typical MnDOT strand configuration, this type of beam would span 12 ft farther than MnDOT's 36M shape. The next step was to understand which features allowed the WF36-49 beam to span so much farther than MnDOT's same-height shape. After investigating several combinations of top- and bottom-flange shapes, MnDOT selected a beam shape with the following attributes:

- Top flange: A tip depth of 5 in. was chosen to facilitate deck replacement. A 34-in. width was determined to be the best option to resist stresses at transfer.
- Web: A width of 6½ in. provided ample shear capacity and the ability to place shear reinforcement.
- Bottom flange: A width of 39 in. was selected to match the bed width of current precast producers. This option also minimized the flange area where strands could not practically be used and flattened the slope of the top face to reduce weight.

The new MH cross section also provides softened flange-to-web radius transitions to enhance form release and increase aesthetic appeal. For comparable depths, the MH shape provides maximum span lengths within 2% of the modified Ohio beam and is 30% lighter per foot. MNDOT chose the depths of the MH shape to fill gaps between existing beam shapes and provide the minimum depth required for typical railroad crossings.

Design Method

Full design criteria can be found in the *MnDOT LRFD Bridge Design Manual*.[1] For the selection table, maximum span length was determined at 5, 7, 9, 11, and 13 ft beam spacing. At each spacing, the MH shape was the most efficient, either by spanning farther or providing comparable span lengths with a lighter section. The MH and MN/OH shapes span farther than other shapes at the same depth. The MH shape was chosen because it weighs 6% less than the MN/OH section.

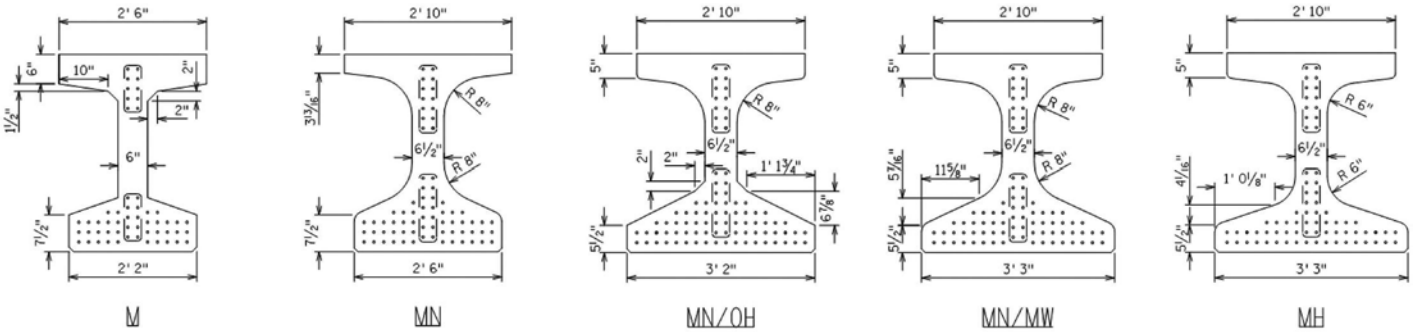

Iteration of cross-section geometry before finalizing the MH shape.

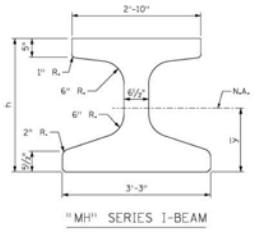

Beam Properties

BEAM	h (in)	AREA (in^2)	W ① (lb/ft)	$\bar{y}$ (in)	I (in^4)	S_B (in^3)	A_c ② (in^2)
30MH	30	639	688	13.66	70,416	5,155	403
35MH	35	672	723	15.85	105,570	6,661	419
40MH	40	704	758	18.07	149,002	8,246	435

① Based on 155 pounds per cubic foot.

② Based on a 9" slab with 1/2" of wear and 1 1/2" stool. See LRFD 5.8.3.4.2 for A_c definition.

Cross-section properties for the shallow-depth MH beams (from reference 3).

Fabricators' Input

As part of the design process, MnDOT incorporated fabricators' input. For hold-down during transportation, the 30MH and 35MH are strapped over the top flange, while the 40MH allows for optional 2-in.-diameter sleeves through the web. For shear reinforcement, MnDOT utilizes no. 5 stirrups at 2½ in. spacing at the ends of the M shapes and no. 6 stirrups at 3 in. spacing at the ends of the MN shapes. There was concern that no. 6 reinforcing bars may be too large and the 2½ in. spacing too tight; therefore, the splitting reinforcement was designed as no. 5 stirrups at 3 in. spacing. Finally, the radius of the web-to-flange chamfers was changed from 4 to 6 in. to allow for better concrete flow and form removal.

Detailing Considerations

Like all other MnDOT shapes, the MH beams are detailed with the outside 6 in. of the top flange troweled smooth, and an approved bond breaker is applied to facilitate future redecking.

Intermediate diaphragms are not required for the 30MH and 35MH beams. The flat portion of their webs is too small to accommodate channel or bent-plate diaphragms. The diaphragm spacing for the 40MH beam will follow guidelines consistent with those for other MnDOT shapes. Likewise, beam-end dimensions, camber prediction, overhang criteria, and material properties will be consistent with specifications for other shallow- to medium-depth beams. Standard bearing, intermediate-diaphragm, and end-diaphragm details were all modified to include the MH shapes and modified as needed to include MH beam dimensional requirements.

Availability Timeline and Future Developments

On December 20, 2018, MnDOT issued a memo to designers[3] announcing the ability to use the new 30MH and 35MH beams for projects with a letting date on or after July 1, 2019. To allow fabricators adequate time to procure forms, the 40MH beams will be permitted for projects letting on or after November 1, 2019.

These new MH shapes are being used for upcoming MnDOT projects and on the local highway system. Cost savings, fabricator concerns, and contractor comments will be analyzed to determine whether additional changes are needed. MnDOT has not typically used strand debonding, but it is utilizing debonding with both the MH and previously developed shapes in upcoming projects.

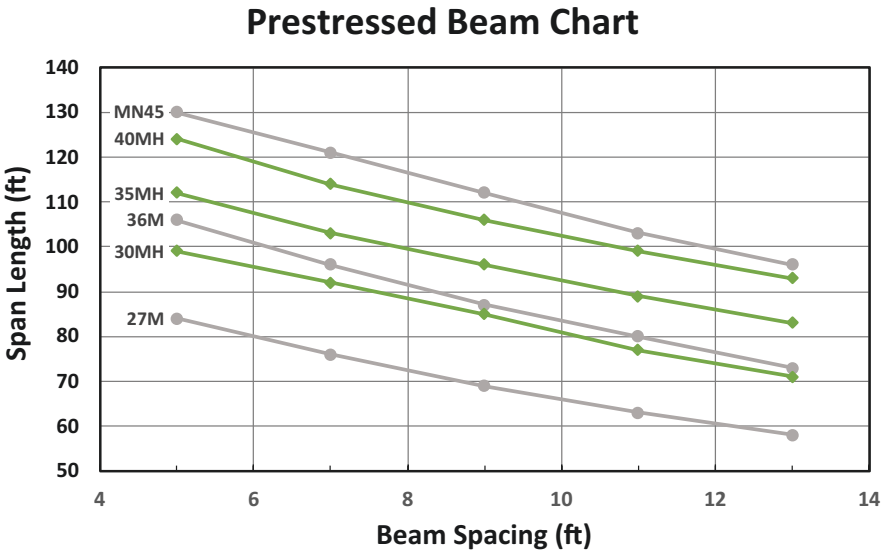

Preliminary beam selection chart, with the beam spacing and span lengths for the new MH shapes and some of the other shallow beams currently in use in Minnesota, from the Minnesota Department of Transportation's *LRFD Bridge Design Manual* (from reference 1).

Conclusion

MnDOT's new MH-series beams should prove to be an efficient beam type for use in the 75 to 105 ft span range. Success developing the beams would not have been possible without collaboration between MnDOT and fabricators. The experiences of other agencies that have developed shallow beams, as well as the past performance of MnDOT's smaller beams, has led to a more efficient option in the shallow-beam category. MnDOT continues to view prestressed concrete beams as the preferred low-maintenance and cost-effective design option for typical bridges. The MH beams add another shape to the toolbox.

References

1. Minnesota Department of Transportation (MnDOT). 2018. *MnDOT LRFD Bridge Design Manual*. https://www.dot.state.mn.us/bridge/lrfd.html.
2. Ohio Department of Transportation (ODOT). 2007. *ODOT Bridge Design Manual*. http://www.dot.state.oh.us/Divisions/Engineering/Structures/standard/Bridges/Pages/BDM2007.aspx.
3. MnDOT. 2018. Memo to Designers #2018-01: New 30 MH, 35MH, and 40MH Prestressed Concrete Beams. https://www.dot.state.mn.us/bridge/lrfd.html.

Robert Hass is a senior engineer and Arielle Ehrlich is the Minnesota State bridge design engineer with the Minnesota Department of Transportation in Oakdale.

EDITOR'S NOTE

The editors of ASPIRE® *wish to congratulate another department of transportation for looking at the shallow-beam sections and optimizing these short-span concrete bridge solutions to remain competitive. See a related article by the Illinois Department of Transportation in the Fall 2015 issue.*

Dynamic Effects of Superstructure Mass during Barge Collisions with Bridges

by Dr. Michael Davidson, Henry T. Bollmann, and Dr. Gary R. Consolazio, Bridge Software Institute, University of Florida

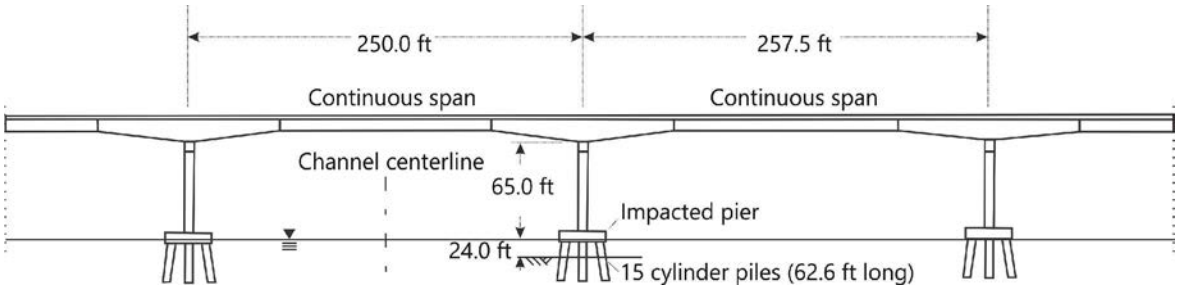

Elevation of channel pier and adjacent spans used in model for barge-bridge collision scenario. All Figures: Bridge Software Institute.

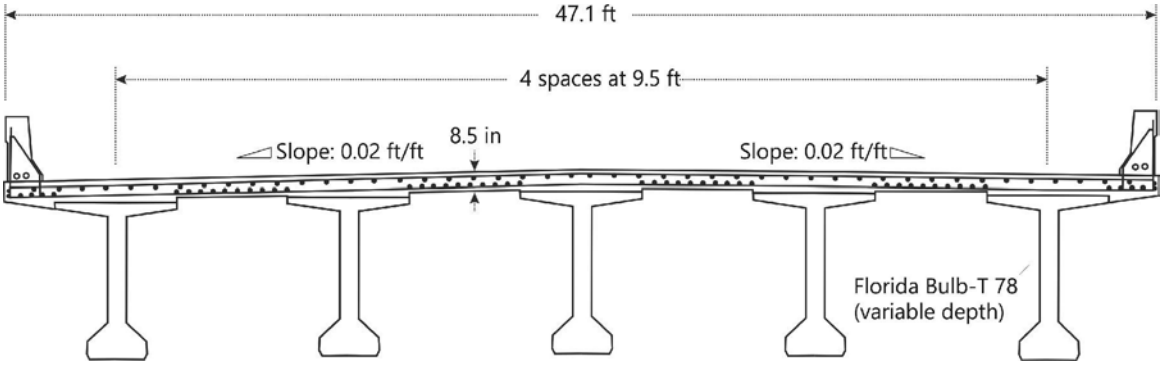

Typical section of superstructure.

During barge-bridge collision events, the superstructure mass of concrete bridges can influence internal forces generated throughout underlying substructures. This article presents a method for dynamically quantifying collision forces and structural demands and applies that method to the analysis of an in-service coastal bridge. The method and tools described here can help engineers in designing concrete bridges that span navigable waterways.

Modeling Barge-Bridge Impact

The St. George Island Bridge is a coastal bridge spanning Apalachicola Bay in northwestern Florida. The southern channel pier supports adjacent 250 ft and 257.5 ft spans. The post-tensioned Florida bulb-tee girders vary in depth from 6.5 ft at drop-in locations to 12 ft above the pier. Both the girders and the 47.1-ft-wide deck are continuous across the pier cap. The five evenly spaced girders each rest on two elastomeric bearings that straddle a cast-in-place shear pin.

For an impact scenario using this structure, a finite-element model of the southern channel pier and adjacent spans (that is, "one-pier, two-span" model) is developed using FB-MultiPier software. In this type of model, all bridge portions more than a span length away from the impacted pier are simplified as springs and lumped masses (spine model), which are positioned at the far ends of the spans. Spring and mass quantities are automatically computed by the program based on a larger bridge model that includes several piers and spans. The simplified "one-pier, two-span" approach allows collision-related design forces to be efficiently computed within a few minutes using ordinary computers, and the accuracy of this method has been verified against more-complex multiple-pier, multiple-span bridge models.[1]

The channel pier contains two 6-ft-diameter pier columns spaced 30 ft apart, which are braced mid-height by a 6-ft-deep shear strut. The 52-ft-long columns are supported at the waterline by a 6.5-ft-thick pile cap. The foundation consists of 4.5-ft-diameter prestressed concrete cylinder piles (14 battered and one plumb) with 10-ft-long reinforced-concrete pile-top plugs. Each of the 62.6-ft-long piles extends through medium-dense to dense sand, and the pile tips bear upon a weathered limestone layer.

Based on waterway traffic local to Apalachicola Bay, a representative collision scenario is formed. It consists of a 3666 ton barge/tug traveling at 6.6 knots (11.1 ft/sec) and striking the 28-ft-wide waterline footing head-on. FB-MultiPier is used to analyze the collision scenario by specifying vessel weight, impact velocity, and impact location, and allowing the software to automatically assign a nonlinear stiffness to represent the impacting barge bow. Both impact forces and bridge internal demands (shears and moments) are computed using this analysis approach, which has been validated against

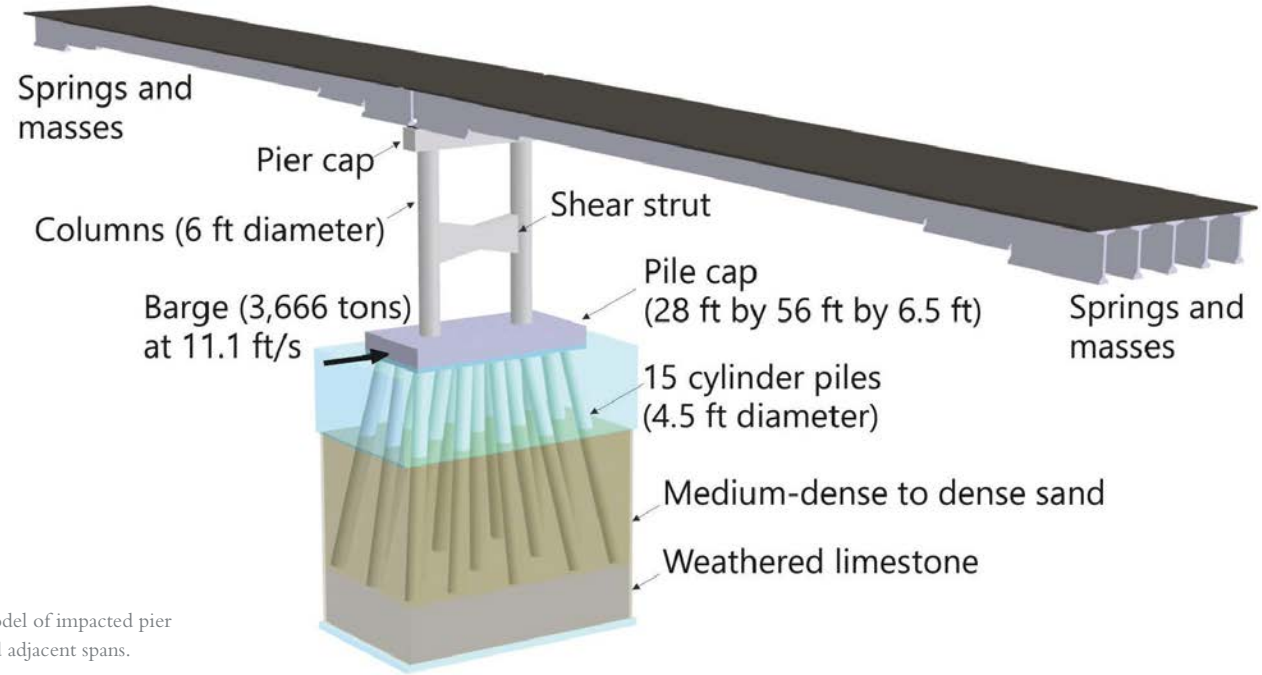

Model of impacted pier and adjacent spans.

full-scale experiments conducted in 2004 on the old St. George Island Bridge before it was demolished.[1,2]

Barge-Bridge Collision Analysis

Using a typical desktop computer, calculation of time-histories of displacements at the impact location and pier top, along with dynamic design forces, is achieved in less than 10 minutes. Analysis results show that primary contact between the barge and pier lasts approximately 1.2 seconds, as indicated by the abrupt reduction in pier column displacements just after 1 second. The maximum impact force of 3148 kip is attained within 0.1 seconds and sustained for an additional 0.9 seconds, while maximum column demands (shear and demand-capacity ratio for axial-moment interaction) occur relatively early, at approximately 0.2 seconds. This phenomenon is due to dynamic amplification of the pier columns' internal forces and is attributable to the mass (inertia) of the concrete superstructure.

At each point in time, the difference between displacements at the impact point and pier top produces lateral

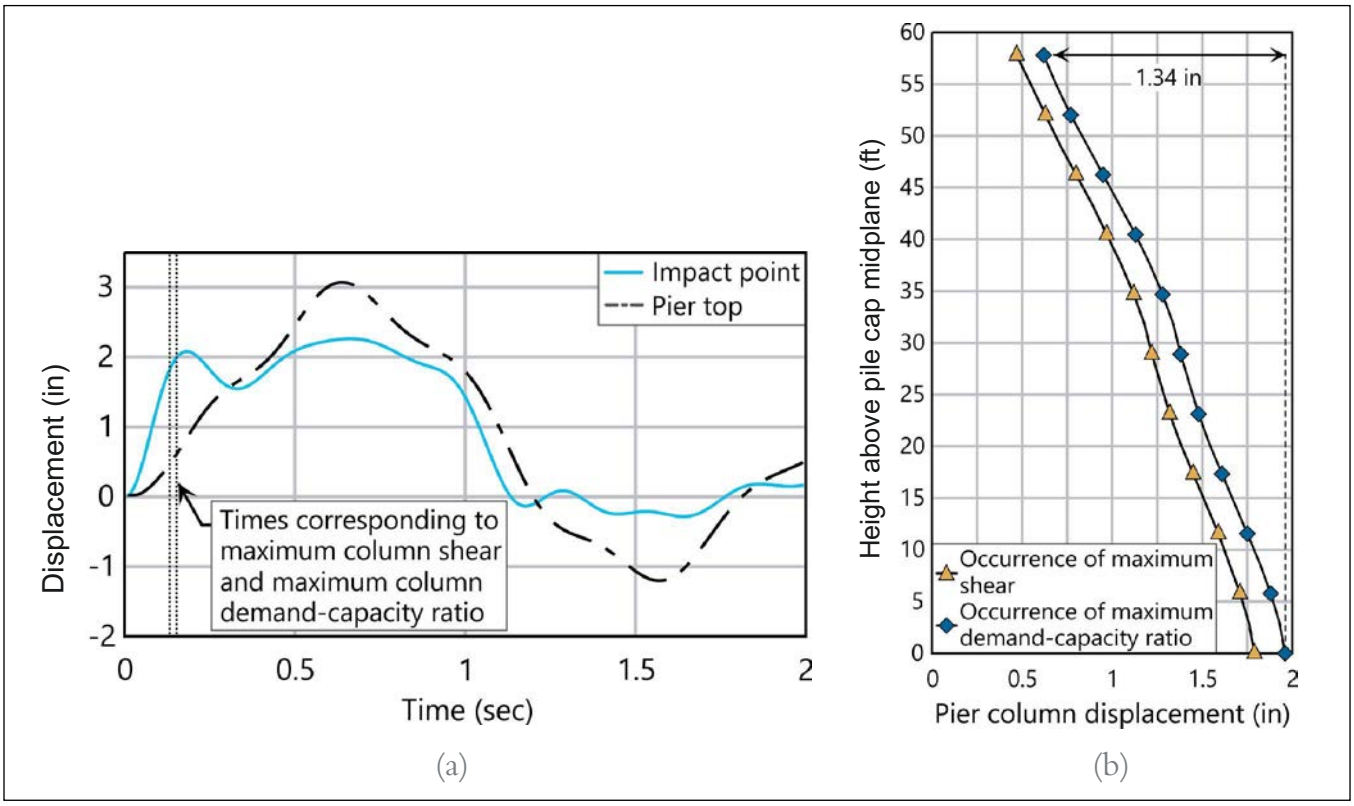

Dynamic response in the pier columns: (a) Time-histories of displacements at the point of impact and at the pier top; (b) Profiles of column displacements when maximum column shear and maximum column demand-capacity ratio occur.

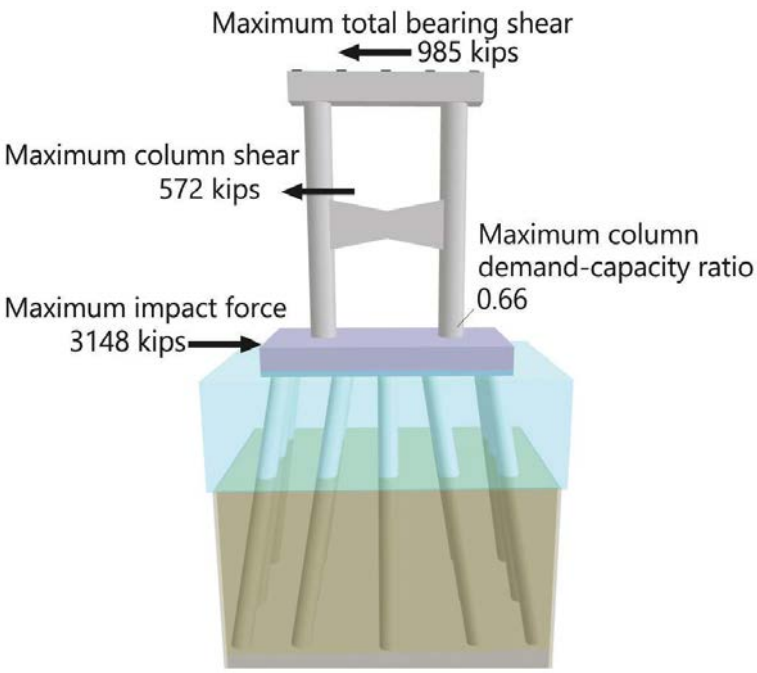

Maximum internal forces and demands after dynamic amplification.

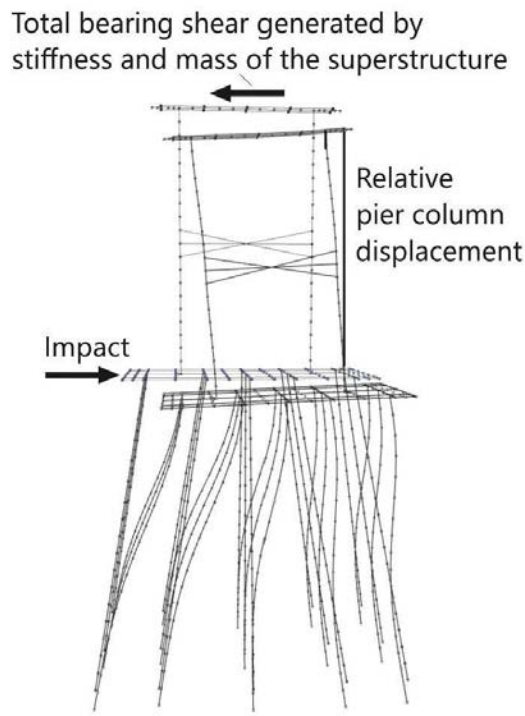

Deformed shape when maximum demands occur (at maximum differential displacement between bottom of column and top of column).

(flexural) deformation in the columns. When relative lateral deformations reach a temporary maximum (1.34 in.) at approximately 0.1 seconds, internal demands are likewise at peak levels. From the onset of impact to approximately 0.1 seconds, displacement at the impact location increases more rapidly than displacement at the pier top. Motion of the pier top is temporarily prevented (restrained) by both the stiffness and mass of the "one-pier, two-span" concrete superstructure.

The phenomenon of mass-related inertial restraint produces a temporary condition in which displacement at the impact location is larger than that at the pier top. Amplified internal forces corresponding to this condition typically produce maximum structural demands. Importantly, the mass of the concrete superstructure influences both the collision force, 3148 kip, and the structural demand, 985 kip maximum total shear at the superstructure bearings, or 31% of maximum impact force. If the same analysis is carried out with the superstructure stiffness still present, but the superstructure weight (10,783 kip) reduced to near zero, the maximum total shear at the superstructure bearings falls to 656 kip, or 21% of the maximum impact force. Pile shears will then increase accordingly. In most common pier configurations, superstructure mass will draw dynamic impact forces upward toward the superstructure, thus increasing column and bearing design forces, but reducing foundation design forces. Since superstructure mass, which varies from bridge to bridge, influences the proportions of impact force that flow upward (to the bearings) and downward (to the foundation), it is recommended that this mass be included in the determination of controlling design forces for bearings, columns, and foundation elements. Inclusion of superstructure mass can be accomplished either using an efficient dynamic approach of the type described in this article, or using more simplified, but conservative, approximations.

Conclusion

Dynamic barge-bridge collision analysis results demonstrate that both superstructure mass and superstructure stiffness influence the distribution of barge impact forces upward to the bearings and downward to the foundation. Additionally, dynamic amplifications of column forces highlight the importance of incorporating influences such as superstructure mass into bridge design processes. Accounting for the flow of dynamic impact forces through piles, columns, and bearings, including the effect of the mass and stiffness of the superstructure, is an important design consideration for potential collision events.

References

1. Consolazio, G. R., and M. T. Davidson. 2008. "Simplified Dynamic Barge Collision Analysis for Bridge Design." *Transportation Research Record* 2050 (1): 13–25.
2. Consolazio, G. R., R. A. Cook, M. C. McVay, D. R. Cowan, A. E. Biggs, and L. Bui. 2006. "Barge Impact Testing of the St. George Island Causeway Bridge Phase III: Physical Testing and Data Interpretation." Structures Research Report No. 26868, Engineering and Industrial Experiment Station, University of Florida, Gainesville.

Dr. Michael Davidson is the associate director of the Bridge Software Institute (BSI) at the University of Florida, Gainesville. Henry T. Bollmann is a senior engineer at BSI. Dr. Gary R. Consolazio is director of BSI and a professor in the Engineering School of Sustainable Infrastructure and Environment at the University of Florida, Gainesville.

Ouachita River Bridge

Louisiana's Test Bed for Link Slabs

by Dr. Ayman M. Okeil and Marco Canales, Louisiana State University; Dr. Mohsen Shahawy, SDR Engineering; and Jenny Fu, Louisiana Department of Transportation and Development

This article describes a research project to evaluate a simplified continuity detail that is now adopted in the recently released revision 8 of the Louisiana Department of Transportation's *LaDOTD Bridge Design and Evaluation Manual* (BDEM).[1] The new detail calls for a continuous deck slab over the joint between the ends of simply supported prestressed concrete girders,[2] which is different from the previous standard detail in which girder ends from adjacent spans were embedded in a continuity diaphragm after a bond breaker was applied to allow for relative movement. The simplified detail discussed here is also different from the detail recommended in National Cooperative Highway Research Program Report 519,[3] in which full continuity is achieved by extending positive moment reinforcement into continuity diaphragms. The latter detail was employed on another LaDOTD project.[4]

Several states have adopted similar simplified details, which may be referred to as "link slabs"; however, there is no consensus on a rational design for this type of detail, and its behavior in service is not yet fully understood. LaDOTD used the Ouachita River Bridge as a test project to evaluate the performance of several variations of the link-slab detail and the older continuity-diaphragm detail.

Ouachita River Bridge Project

The new Ouachita River Bridge carries Louisiana Highway 8 over the Ouachita River at Harrisonburg, La. It has a clear roadway width of 44 ft and consists of 20 spans with a total length of 3275 ft. All spans, except for the three-span main unit crossing the river, have a typical cross section consisting of American Association of State Highway and Transportation Officials (AASHTO) bulb-tee (BT-72) prestressed concrete girders supporting an 8.5-in.-thick slab. There are three types of units: the typical unit has two 135 ft continuous spans (270 ft); one unit has four continuous 135 ft spans (540 ft); and there is a single 135 ft simply supported span. Design variations, such as continuity details, numbers of spans per unit, link-slab reinforcement materials (stainless steel versus mild steel bars), and crack control details, were used at different locations. Two diaphragm details were used at interior supports of continuous units: Detail I for "floating" units, which are not fixed to bents, and Detail II for "anchored" units, which, when required, are tied to a bent by reinforcement extending into the full-depth diaphragm.

A 136-sensor structural health-monitoring system was installed to assess performance of the different details. Strains, displacement, rotations, and ambient environmental conditions

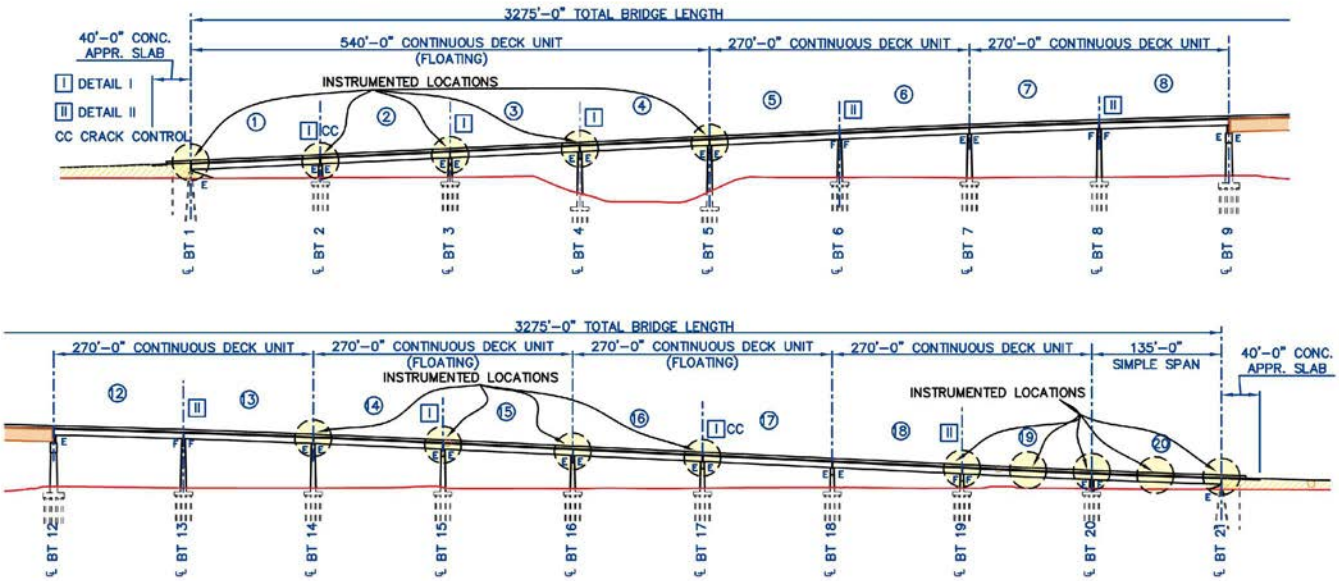

Configuration of approach spans for the new Ouachita River Bridge. Note: E = expansion bearing, F = fixed bearing. The type of link-slab detail (I or II) used at each interior bent is also indicated. Figure: Dr. Ayman Okeil.

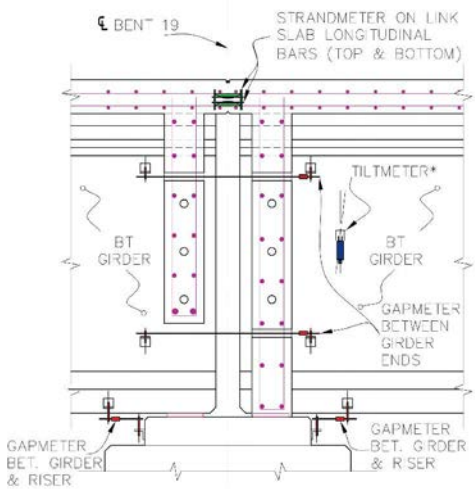

Diaphragm and instrumentation details at an interior bent. Detail II for anchored units is shown with one full-depth diaphragm that is fixed to the bent cap with dowels (not shown). Detail I for floating units is similar with both diaphragms being partial depth. Figure: Dr. Ayman Okeil.

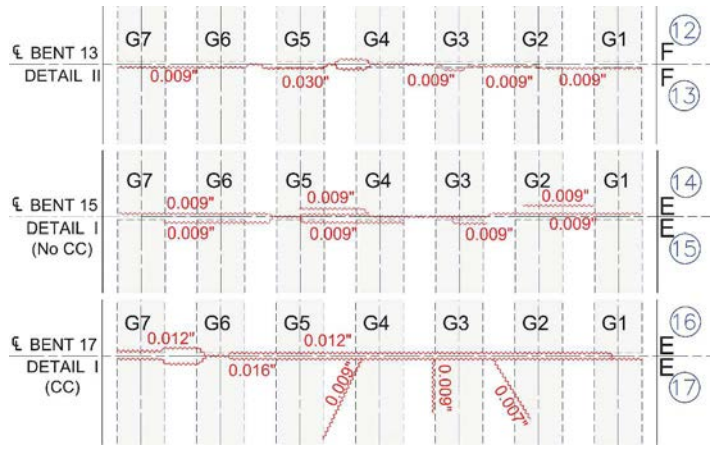

Top-view schematic of typical transverse deck cracking at several link-slab locations where different details are used. Note: CC = crack control (sealed groove), E = expansion bearing; F = fixed bearing; number in a circle = span number. Figure: Dr. Ayman Okeil and M. Canales.

(temperature and humidity) were recorded.

Performance Observations

Deck Cracking

Deck cracking was surveyed for about 15 months before the bridge opened to traffic. As is typical with cast-in-place decks, transverse cracks were observed at all link-slab locations. Mitigation strategies employed in the project did not prevent crack initiation. Where a silicone-filled, ½-in.-wide groove was saw cut in the top surface of the deck (centered over the joint between the ends of the girders), cracks often propagated parallel to the groove. In some instances, the crack formed in the groove but appeared again 3 to 6 in. to either side, a site that roughly coincides with the ends of the prestressed concrete girders. It was therefore concluded that the introduction of a groove at this location did not control deck cracking outside of the groove, and hence it is not required in the new LaDOTD standard details.

Crack widths were clearly affected by the support conditions. Link slabs over bents with fixed supports where full-depth end diaphragms were anchored to the bent cap (Detail II) experienced wider cracks (up to 0.030 in.), whereas narrower crack widths (<0.016 in.) occurred in link slabs over bents using partial-depth end diaphragms (Detail I). The figure above shows crack patterns at Bent 13 (Detail II), Bent 15 (Detail I with crack control measures), and Bent 17 (Detail I without crack control measures).

Temperature Gradient Effect

Strains were recorded in link-slab reinforcement during the month of January 2018 at Bent 19 over Girder G4. Notably, the strains are out of phase with the recorded ambient temperature. This finding is attributed to upward camber caused by a temperature gradient in the girder, which applies compression at the top of the link slab. During this month, the compressive strains are relatively low and the tensile strains are lower than the cracking strain (~130 $\mu\epsilon$). Summer readings are typically higher, which is the cause of cracking. Displacement sensor readings were used to compute, the relative angle between girder ends, which is important for calculating girder-end forces. The relative movement between the girders joined by a link slab can be translated into forces using an analytical model.

Live-Load Test

A load test was conducted using two concrete mixer trucks filled with coarse aggregate. They weighed 64.35 and 64.67 kip and were positioned in truck-train (one on each span) and truck-tandem (both trucks on the same span) configurations to cause maximum negative—and positive—moment effects, respectively. A total of 23 load cases (12 negative and 11 positive) were executed. The recorded data from the field live-load tests revealed that the live-load effect on link-slab forces is less than that caused by the thermal gradient.

Analysis of Link Slabs

The internal forces in the link slab are calculated using a free-body diagram of the composite girder. It is assumed that the link slab elongates due to girder-end rotation. The extension of the link slab on both ends of the link slab can be calculated using girder-end rotations for live load or thermal gradients.

Analyses of typical slab-on-girder configurations revealed that required link-slab reinforcement can be achieved by adding 10-ft-long no. 6 longitudinal bars between typical longitudinal bars in both the top and bottom of the deck. This detail controls crack widths expected in the link slab and resists the axial forces that develop.

Conclusions

This project allowed LaDOTD to fine tune its new continuity deck detail. Based on the project findings, the following were observed:

- The floating link-slab detail (Detail I) performed better than the anchored diaphragm detail (Detail II).
- A groove in the middle of the link slab is not necessary because transverse deck cracking in link slabs is inevitable but not alarming if Detail I is used.
- Temperature effects are at least as significant as the live-load effects and should be considered in the design.
- The use of floating spans is feasible

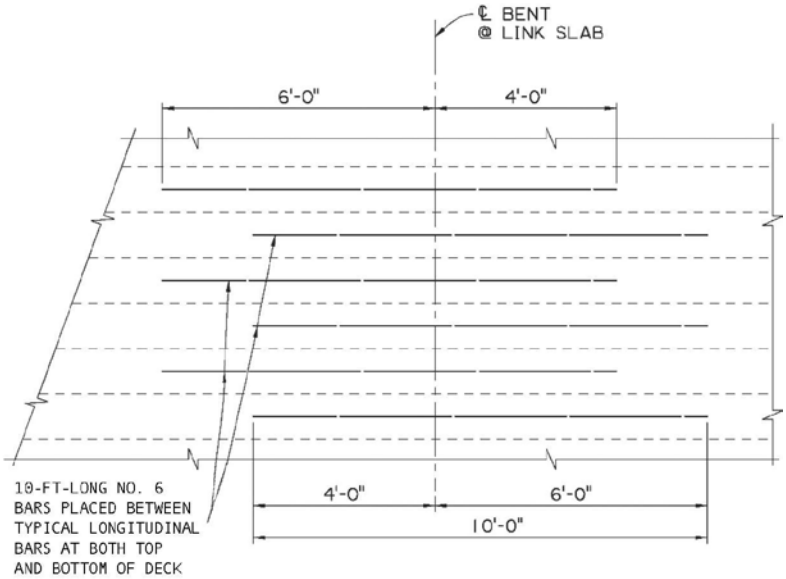

Additional reinforcement at a link-slab location for nonskewed bents. The detail for a skewed bent is similar. Figure: Louisiana Department of Transportation and Development.

for bridges that are not expected to experience large lateral and uplift forces (for example, structures in low seismic zones or structures unexposed to wave action).

- Cracking caused by forces that develop in the link slab can be controlled by adding 10-ft-long no. 6 bars placed between typical longitudinal bars at both the top and bottom of the deck.

Acknowledgments

The work presented in this article is part of a research project sponsored by the Louisiana Transportation Research Center (LTRC Project No. 14-1ST). The support of Dr. Walid Alaywan, LTRC project manager, and Paul Fossier, LaDOTD bridge design administrator, is greatly appreciated. Ahmed Elshoura was instrumental in conducting field testing with support from Bridge Diagnostics Inc (BDI). Any opinions, findings, and conclusions or recommendations expressed in this article are those of the authors and do not necessarily reflect the views of the sponsoring agencies.

References

1. Louisiana Department of Transportation and Development (LaDOTD). 2018. *LaDOTD Bridge Design and Evaluation Manual*. Version 8. http://wwwsp.dotd.la.gov/Inside_LaDOTD/Divisions/Engineering/Bridge_Design/Pages/BDEM.aspx.
2. Okeil, A.M., and A.K. El-Safty. 2005. "Partial Continuity in Bridge Girders with Jointless Decks." *Practice Periodical on Structural Design and Construction*, 10(4): 229–238.
3. Miller, R.A., R. Castrodale, A. Mirmiran, and M. Hastak. 2004. *Connection of Simple-Span Precast Concrete Girders for Continuity*. NCHRP Report 519. Washington, DC: National Cooperative Highway Research Program.
4. Hossain, T., A.M. Okeil, and C.S. Cai. 2014. "Field Test and Finite-Element Modeling of a Three-Span Continuous-Girder Bridge." *Journal of Performance of Constructed Facilities*, 28(1): 136–148.

Dr. Ayman Okeil is a professor and Marco Canales is a graduate student, both at Louisiana State University Department of Civil and Environmental Engineering in Baton Rouge. Dr. Mohsen Shahawy is the chief executive officer of SDR Engineering Consultants Inc. in Tallahassee, Fla., and Zhengzheng (Jenny) Fu is the bridge design administrator for the Louisiana Department of Transportation and Development in Baton Rouge.

EDITOR'S NOTE

Use of the term "link slab" in this article differs from a more common link-slab concept in which bond is prevented between girders and deck slab in the link-slab region. See the Concrete Bridge Technology article on eliminating expansion joints in the Fall 2016 issue of ASPIRE®.

Let's Teach Engineering Like We Teach Baseball

by Dr. Richard Miller, University of Cincinnati

If we taught baseball the way we teach engineering, no one would play. Before taking to the playing field, potential players would have to take separate classes on the rules, and how to throw, catch, hit, and run the bases, and they would initially have no idea why they were learning some of these things. They would have to spend years learning the basics in the classroom before they were allowed to play their first game. By that time, they would most likely have forgotten how to throw or catch because it had been so long since they had worked on those skills. If they managed to hit the ball and run to first base, they might have no idea why or what to do next. This scenario assumes players would not get completely bored with the whole thing and quit long before they ever played an actual game.

What I've just described is how most colleges and universities currently teach engineering. In their freshman year, students take math and science classes, which mostly repeat high school coursework. Next, students take engineering science. They analyze beams and columns that aren't connected to anything, and loads are given in the problem with little or no explanation of how they were calculated. Students learn disparate theories with little reference to actual practice. Design classes are usually about component design, first covering beams and then columns, but rarely entire structures. In the senior year, students take a "capstone class" where we expect them to pull it all together and design something. When this method of teaching is used, many engineering students struggle—just as you would struggle to learn baseball if you didn't actually play the game.

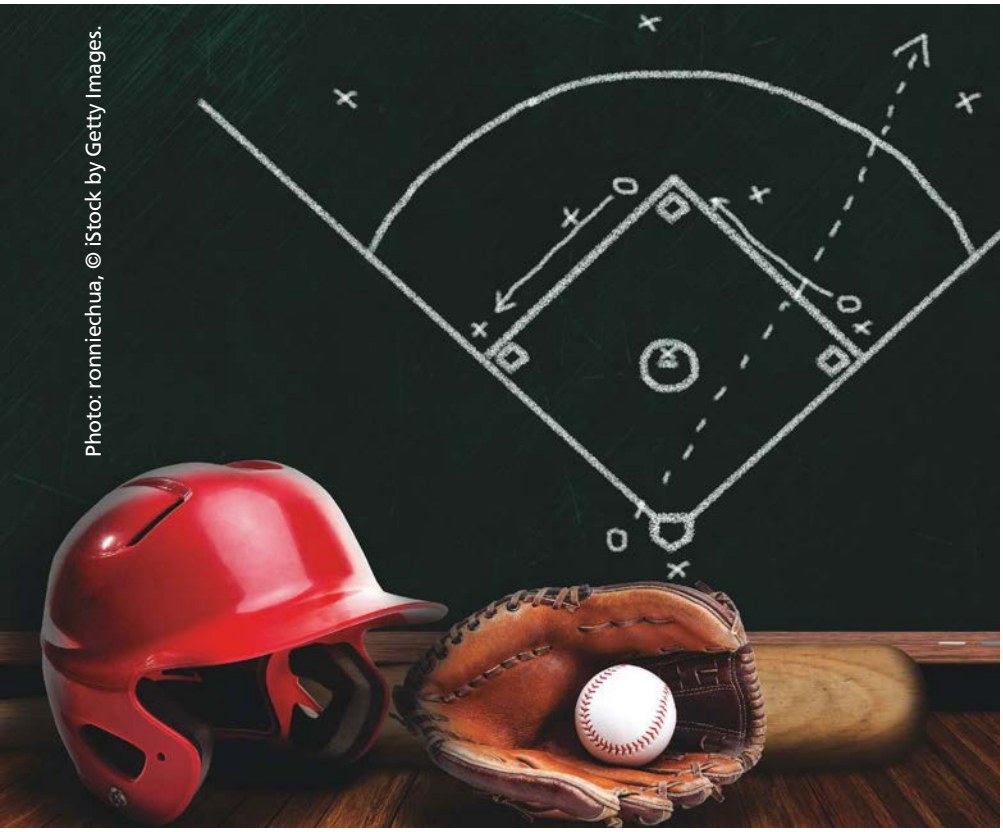

Photo: ronniechua, © iStock by Getty Images.

Historically, engineering education was originally an apprenticeship program. In the United States, college degree programs in engineering started in the 1860s, when Congress wanted to establish land-grant universities to teach the practical aspects of disciplines like engineering. Engineering remained a hands-on type of education until the 1930s when European professors such as Westergaard, Timoshenko, and von Karman shifted American engineering education toward more theory, making it similar to the European model.

In the 1950s and 1960s, the U.S. government began to fund millions of dollars of research to develop technologies, mostly for military purposes and the "space race." Universities responded by tilting engineering curricula further toward theory and science to meet the demand for research. At this point, some of the original proponents of the more theory-based education felt that the balance had tipped too far toward theory and that the practice of engineering was being lost.

For modern students, the situation is complicated by the lack of opportunities to work on practical, hands-on problems. Before they entered college, past generations of would-be engineers had repaired their own cars, built amateur radios from kits, played with chemistry sets, and fixed household items. Today's students do not always have the same opportunities to fix or build things, and many arrive at the university with little practical, mechanical knowledge.

So, perhaps we should teach engineering the way we teach baseball. In baseball, we start by teaching a simple version of the game—the ball is hit off a tee, players can only advance

one base at time, there is no stealing, an inning is 5 runs or 3 outs, and so on. After T-ball, the game grows more complex and challenging until eventually the players are playing the actual game of baseball. From the start, what is important is that players are learning the fundamentals and can immediately apply what they learn to real situations. They also have fun.

For years, some have argued that we need to teach engineering in a more holistic way. Some small colleges have tried this, but most large universities stick to the status quo model. The basic idea in the holistic approach is to introduce civil engineering elements—like a building, a bridge, and a roadway—in the freshman year, and then build students' engineering knowledge incrementally through application.

The first step would be to explain how the elemental items actually work. How does a snow load get from the roof to the foundation? How do wheel loads act on a bridge? What are some of the basics of laying out a road? This initial class would be conceptual, aimed at getting students to understand how things fit together.

Subsequent courses would use these elements. We could use different loading patterns on the bridge as example problems in statics or strength of materials. Frames within the building could be homework problems in structural analysis. The road could be the project in surveying. All elements could be used in design classes and perhaps in the senior design project. We could also work with professors teaching general education classes to integrate the elements from the engineering curriculum into courses exploring relevant nontechnical issues, such as economics, public concerns, and sustainability.

So why don't we do this? Accreditation is one barrier. About 20 years ago, the Accreditation Board for Engineering and Technology (ABET) made a change to accreditation. Consequently, schools now have a set of learning outcomes they must assess. This was a good change because it is a performance-based specification—tell us what you want us to do and then see if we do it. Unfortunately, some of the old, prescriptive-based accreditation rules (such as engineering majors are required to take 32 credits of math and science) remained. If the ABET requirements were strictly an assessment of outcomes, we could innovate more in the engineering curricula.

Another factor that deters programs from adopting the holistic method is that it requires coordination among faculty across many classes. I can tell you that coordinating faculty for a few sections of single class is a challenge. Trying to coordinate across an entire curriculum will be even more difficult, but it can be done.

The final barrier is that many people are just resistant to change. For 50 years, engineering curricula have basically remained unmodified. Change always takes a lot of work and involves risk.

However, if we are willing to take a more holistic look at curricula instead of the piecemeal approach we use today, we might better educate engineers who can see the big picture and are better able to create innovative designs to meet an ever-growing public need.

Truck Platoons and Highway Bridges

by Dr. Joey Hartmann, Federal Highway Administration

In my position as director of the Federal Highway Administration's Office of Bridges and Structures, I have repeatedly been asked by both internal and external stakeholders what potential impacts I foresee from truck platoons on highway bridges and tunnels. My immediate response is to ask in return: What is a truck platoon? This may seem to be a flippant and unsatisfying reply, but until a definition exists that describes what constitutes a truck platoon and how platoons will be allowed to operate, we cannot forecast their impact with any certainty.

As you may know, advances in technology have made it possible to electronically connect vehicles so that they can safely operate in unison with very little headway (distance between the front of the trailing vehicle and the back of the leading vehicle). In a manner similar to drafting vehicles on a car racetrack, platooned trucks could collectively achieve significant efficiencies, and those efficiencies could lead to a lower demand for fuel and corresponding drops in operating costs and adverse environmental effects. These are not the only potential benefits of truck platoons, but they are likely the ones most evident to the public.

Highway bridges are currently designed for a notional live-load model that envelops the force effects that current legal truck traffic creates on bridges. Once in operation, highway bridges are evaluated (load rated) for all individual legal and unrestricted truck configurations. Without a clear understanding of the possible loading models that platoons might create, engineers cannot determine whether design loads are adequate, nor can they conduct valid load ratings to determine the impact of truck platoons on the 615,000 existing bridges in the National Bridge Inventory. To meet those obligations, several questions need to be answered.

How Many Trucks Can Be in a Platoon?

In demonstrations in the United States and elsewhere, platoons have included two, three, or four trucks, but present and future technology will certainly accommodate more. The number of trucks in a platoon needs to be determined for two reasons. First, from a load-rating perspective, a truck or a platoon of trucks is modeled as a series of axle loads and spacings. Thus, the platoon will be treated as one long truck with individual and tandem axle weights and spacings.

Second, from a safety perspective, we need to determine how long a platoon can be before it begins to pose unacceptable risks to the traveling public. For example, if a platoon is passing a highway exit, how does that affect other vehicles' access to the exit? Also, what happens when a platoon is exiting? Can the exit ramp accommodate the length of the platoon, or does the platoon back up onto the bridge or cause other traffic to back up onto the bridge?

What Truck Configurations Can Be Platooned?

Although most demonstrations to date have focused on three- to five-axle semi-tractor-trailer combinations, will all legal configurations (including twins and triples in states where those combinations are legal) be permitted to platoon? Will platoons only be composed of similar configurations, or will mixed configurations be permitted? Once platooned, what is the minimum headway between trucks? What is the minimum spacing between platoons? What is the minimum spacing between a platoon and a nonplatooned truck? We need answers to these questions (and likely others) to understand the possibilities of axle spacings in a platoon, and for a platoon operating in traffic.

From a capacity (strength) perspective and considering only gravity loads, the operation of platoons may not significantly affect bridges

A three-truck platoon. All Photos and Figures: U.S. Department of Transportation.

with shorter spans that would not dimensionally accommodate more axles or longer bridges that primarily support their own weight (dead-load dominant). Of much more concern is the inventory of existing bridges with span ranges that will accommodate the additional axles of a platoon, and for which carrying trucks (live load) accounts for a significant percentage of their capacity. For these bridges, the design live-load model (last updated in 1993) may have resulted in a bridge with insufficient capacity to safely carry the load of an unrestricted platoon. Furthermore, their load capacity may have decreased due to structural deterioration over time, leading to the same outcome.

From a service-life and fatigue perspective, the stress range and number of load cycles caused by a platoon may accelerate deterioration of the bridge deck, expansion joints, and other localized details. These issues will potentially add to the backlog of maintenance and rehabilitation needs that bridge owners nationally face every year.

What Weight Limits Apply to Platooned Vehicles?

Several issues are involved in the discussion of weight limits. Will platooned trucks be constrained by the same single- and tandem-axle weight limits required by Formula B, or by lower limits? Under the Fixing America's Surface Transportation (FAST) Act, emergency vehicles weighing up to 86,000 lb on three axles are legal. Will they be allowed to platoon or operate with other legal vehicles in a platoon? Will unrestricted permit loads be allowed to platoon?

Clearly, we must determine the weight limits allowed for single axles and tandem axles on platooned trucks before we can fully define the load models to evaluate bridges and establish their safe live-load carrying capacities (load ratings). Without defined load models, bridge owners will not be able to fulfill their regulatory obligations under 23 U.S. Code Sec. 144 (implemented through 23 CFR 650), which requires calculation or reevaluation of bridge load ratings to ensure safety.

How To Restrict or Post a Bridge for a Platoon?

We will need to adjust our bridge posting practices to accommodate platoons. Typically, when bridges have less capacity than is needed to safely carry legal and unrestricted loads, posting signs indicate a gross vehicle weight (GVW) limit or GVW limit associated with a certain number of axles. In the future, some bridges may require an additional posting sign pertaining only to platoons to indicate a minimum headway between trucks.

Formula B, also known as the Bridge Formula, limits the weight-to-length ratio of a vehicle crossing a bridge. This is accomplished by spreading the weight over additional axles or by increasing the distance between axles. From https://ops.fhwa.dot.gov/Freight/resources/bookshelf/index.cfm.

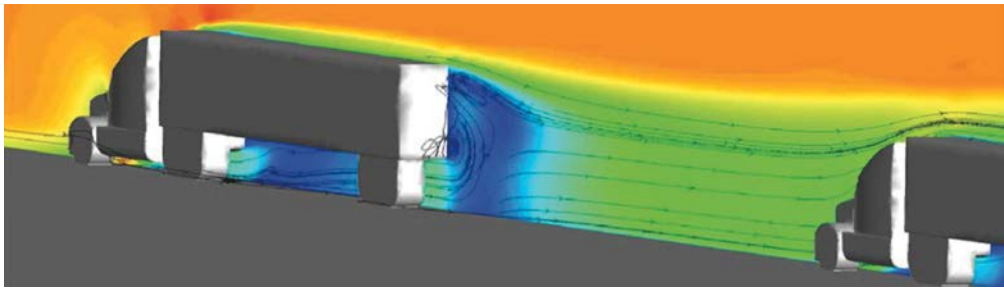

Aerodynamic drag is reduced by platooning.

We also need to understand how nonlead trucks or trucks passing a platoon will interact with restrictions or load postings. Currently, truck weight and height restrictions are self-enforced. Because truck headway in a platoon will be small, it is likely that only the lead truck will have the advance notice needed to detour around a posted weight- or height-restricted bridge. Will the lead truck be responsible for communicating those restrictions to the other platooned vehicles, or will the lead truck simply take on the responsibility to enforce on the entire platoon the restrictions as they apply to the heaviest and tallest truck?

How Fast Will Platoons Travel?

A truck's speed is a primary contributing factor to the impact (dynamic load) it creates on a bridge, adding to the apparent vertical loads. If a structure is horizontally curved, centrifugal forces may be generated at higher than expected levels for a platoon. Therefore, it is important to consider whether platoons will operate at posted speeds or at something less than posted speeds.

How Will Platoon Braking and Collisions Affect Bridges?

Brakes alone do not slow or stop a truck. The bridge or pavement is in the load path. If braking in a platoon is coordinated, will the larger horizontal loads imparted cause an increased rate of failure of bridge bearings and expansion joints?

If the lead truck drives into a parapet or rail, will it lead the other trucks into the same rail? If so, rail design loads will need to change. Will that have a corresponding effect on the strength of the connection to the deck, or on the design of the deck itself?

How Else Will Platoons Affect Traffic?

One important issue related to traffic flow involves passing. Will a platoon be permitted to pass a nonplatooned truck? Will a platoon be able to pass another platoon?

Another issue is traffic density. The factors that are currently used to capture the load effects of the presence of multiple (side-by-side) trucks are based on truck-density data within existing traffic. Will platoon operations alter those statistics significantly? Also, will the operation of platoons in urban areas be restricted to select windows of time (such as 10 p.m. until 6 a.m.) to minimize their impact on rush hour traffic?

Finding Answers

As a community, we need to identify and capitalize on lessons learned from past practices and research. The American Association of State Highway Officials Road Test conducted in the 1950s and 1960s documented the accelerated deterioration in bridge decks and pavements that can occur with channelized traffic. Placing a wander requirement on platooned trucks so that wheels are not always in line along the length of the platoon will probably decrease the efficiency of platoon operations, but it will increase the service life of the transportation infrastructure. A balance between these two will need to be identified or negotiated.

This article has not offered an all-inclusive list of the issues and questions that need study before the effects of truck platooning on infrastructure can be projected. For example, another question is: How does the model for wind effects on live load change if the live load is now a wall of trucks with minimal headway to allow wind to pass through? I am sure there are others. The point I hope I have made is that platoons, like other advances, will be technologies that have the potential to change how freight is moved and how the infrastructure that supports that movement is affected. To accommodate this new technology, we need to research and consider the potential effects so as to best preserve the existing infrastructure and appropriately design and construct future structures.

PCI Offers New Transportation eLearning Modules

Courses on Design and Fabrication of Precast, Prestressed Concrete Bridge Beams

The PCI eLearning Center is offering a new set of courses that will help experienced bridge designers become more proficient with advanced design methods for precast, prestressed concrete flexural members. There is no cost to enroll in and complete any of these new bridge courses.

The courses are based on the content of AASHTO LRFD and PCI publications. These include several State-of-the-Art and Recommended Practice publications, as well as the *PCI Bridge Design Manual*. These are available for free to course participants after registering with a valid email. While the courses are designed for an engineer with five or more years of experience, a less experienced engineer will find the content very helpful for understanding concepts and methodologies.

Where applicable, the material is presented as part of a "real world" example of a complete superstructure design so that students can see how actual calculations are completed according to the AASHTO LRFD specifications.

All courses on the PCI eLearning Center are completely FREE. **Go to: http://elearning.pci.org/**

PCI eLearning Precast, Prestressed Concrete Bridge Girder Series

Preliminary Precast, Prestressed Concrete Design (T110)

Materials and Manufacturing of Precast, Prestressed Concrete (T115)

Design Loads and Load Distribution (T120)

Flexure Service (T125)*

Flexure Strength (T130)

Prestressed Losses (T135)*

Shear (T145)*

End Zone Design (T160)

Extending Spans (T310)*

Bearing Pads (T450)*

In-Service Analysis Load Rating (T710)*

Full-Depth Precast Concrete Deck Panels Series

Introduction on Full-Depth Panel Precast Concrete Deck System and Its Advantages (T210)

Design and Detailing of Full-Depth Precast Concrete Deck Panels (T215)

Production and Construction Details of Full-Depth Precast Concrete Deck Panels (T220)

Case Studies and Emerging Developments of Full-Depth Precast Concrete Deck Panels (T225)

Lateral Stability of Precast, Prestressed Concrete Bridge Girders Series

Introductory Material and Hanging Girders (T520)*

Stability of Transported Girders (T523)*

Seated Girders and Stability Issues from Bed to Bridge (T525)*

Stability Calculations and Sensitivity Analysis (T527)*

**These PCI eLearning Courses will be available soon.*

This material is disseminated under the sponsorship of the U.S. Department of Transportation in the interest of information exchange under DTFH61-13-D-00010 Task No. 5010. The U.S. Government assumes no liability for the use of the information. The U.S. Government does not endorse products or manufacturers. Trademarks or manufacturers' names appear in this material only because they are considered essential to the objective of the material. They are included for informational purposes only and are not intended to reflect a preference, approval, or endorsement of any one product or entity.

AASHTO THE VOICE OF TRANSPORTATION

PCI Precast/Prestressed Concrete Institute

Long-Span Prestressed Concrete Girders

by Lee A. Wegner, Forterra Structural Precast LLC

Navigating a 203-ft-long beam through city streets takes considerable coordination and planning. All Photos: Forterra Structural Precast.

With the advent of the newer, more efficient girder shapes and higher concrete strengths, achievable span lengths continue to increase. The advantages of precast concrete for bridge girders are well known, including lower costs, longer durability, low long-term maintenance, rapid production, and short on-site erection times. These benefits have led designers and owners to maximize the use of precast concrete girders in span lengths that historically were exclusively in the realm of steel girders. Forterra Structural Precast's Salt Lake City, Utah, plant has been at the forefront of this exciting trend. The company has produced a 203-ft-long girder, the longest precast concrete girder in the state of Utah and the third longest in the nation.

One of the earliest challenges in this feat was overcoming the fear of the unknown. Up until the Beck Street Project (see the Project article in the Spring 2012 issue of *ASPIRE*®) in 2012, the longest precast concrete girder produced by the Salt Lake City facility was 162 ft. For the Beck Street Project, the company produced a 194-ft-5-in.-long girder. Innovation typically runs up against resistance. In this case, production personnel needed to be convinced that the company could successfully and safely produce, ship, and handle a piece of concrete that was significantly larger than anything it had done before.

To produce girders for these long spans, it is paramount that the precaster is involved early in the design process. This is accomplished during the design-build procurement process. To date, every project for which Forterra has produced long-span girders has used a design-build delivery system. This process rewards ingenuity and the use of cutting-edge technology to deliver a project in the quickest, most economical way possible.

Shipping and installation are the final hurdles to overcome when producing long-span precast concrete girders. As has been well-documented in several PCI publications, such as *Recommended Practice for Lateral Stability of Precast, Prestressed Concrete Bridge Girders*,[1] stability during shipping and erection is a major concern. Forterra's method has been to add temporary top strands to the girders. This method has its own challenges. Detensioning these strands after a girder is installed, often over live traffic, must be taken into consideration and carefully planned during design. Also, the special equipment necessary to transport and erect a concrete girder of this size is not readily available; therefore, Forterra plans and schedules with shipping and crane companies well in advance of erection.

Anchorage detail for temporary top strands added by Forterra to ensure stability of a long girder during shipping and erection.

With long-span girders, planning for site logistics, adjacent traffic, and the use of multiple cranes is critical and needs to occur during the design phase.

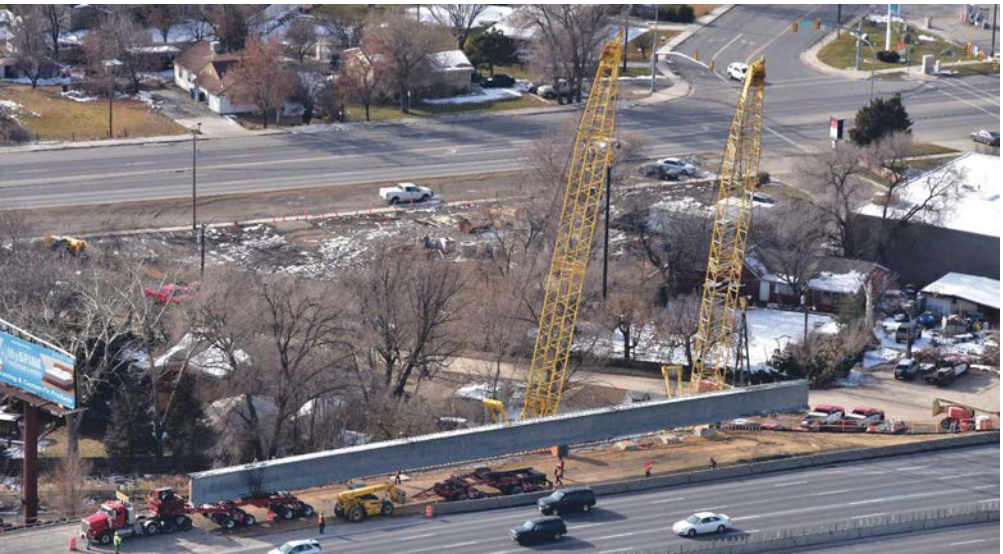

Forterra is currently in the midst of its third project producing girders in excess of 190 ft. The company is understandably proud of its ability to deliver a quality product that is at the forefront of today's precast concrete technology.

Reference

1. Precast/Prestressed Concrete Institute (PCI). 2016. *Recommended Practice for Lateral Stability of Precast, Prestressed Concrete Bridge Girders*. Publication CB-02-16-E. Chicago, IL: PCI.

Lee A. Wegner is part of the transportation sales/project management group with Forterra Structural Precast LLC in Salt Lake City, Utah.

Internal Curing Concrete Bridge Decks in New York State

by Duane Carpenter, New York State Department of Transportation

The inspection of Interstate 190 over Interstate 290. All Photos: Duane Carpenter and Mathew Royce.

In May 2018, the New York State Department of Transportation (NYSDOT) began using internal curing concrete on all multispan bridge decks as part of the NYSDOT *Standard Specifications*, Section 557-2.01. NYSDOT expects the internal curing concrete to dramatically reduce cracking and, by doing so, to increase the service life of these bridges.

NYSDOT has spent decades trying to improve bridge decks. It began using pozzolans in the 1990s to reduce the permeability of concrete. Unfortunately, one of the consequences of adding pozzolans was an increase in deck cracks. It has been jokingly said that, "Between the cracks, this is the best concrete available." After years of studying the causes of deck cracking, NYSDOT concluded that the forces resisting the cracking were only slightly larger than the forces creating the cracking. Furthermore, if just one of the major factors that caused the cracking could be addressed, cracking could be reduced significantly. The easiest factor to address was concrete shrinkage.

As fresh concrete hardens, water is consumed by the chemical hydration process. These chemical reactions leave behind tiny voids in the concrete. Traditionally, concrete is soaked with water when curing, and this additional water penetrates into the concrete to fill the tiny voids and promote further hydration. New concrete with added pozzolans is so impermeable that externally applied water cannot soak in. The voids created by the consumption of the mixture water result in a vacuum that shrinks the volume of the concrete. When the shrinkage is restrained by reinforcement or shear studs attached to girders, cracking results.

Internal curing concrete replaces about 30% (by volume) of the fine aggregate with a lightweight fine aggregate that has been prewetted. The lightweight fine aggregate used by NYSDOT is expanded shale. The water that is absorbed by the lightweight aggregate does not increase the water-to-cement ratio. As the concrete cures, the lightweight aggregate releases its stored water to the concrete. As this water fills the tiny voids, it reduces the vacuum, the forces due to the concrete volume shrinkage, and the tendency of the concrete to crack.

Around 2008, NYSDOT experimentally used internal curing concrete on 20 bridge decks. It took about four construction seasons to build the bridges. After a few years of service, these bridges were found to have a 70% reduction in cracking. As an example, the Route 353 Bridge over the Allegheny River was five spans and over 1000 ft long and had no cracks.

The material cost of internal curing concrete is marginally higher due to the extra work for the concrete supplier associated with prewetting the porous aggregate. However, the installed costs have been the same as for traditional concrete.

The internal curing concrete mixture is almost indistinguishable from traditional concrete, and it requires no changes to the concrete placement operations. The only difference that contractors report is that the mixture is a little easier to work with because it is not as sticky as traditional concrete.

Duane Carpenter is a construction specification writer (structures) with the New York State Department of Transportation in Albany, N.Y.

EDITOR'S NOTE

The requirements for using internal curing for bridge decks and useful background information are found in Section 5.1.2.3 of the NYSDOT Bridge Manual *(2019), which can be accessed at this link: https://www.dot.ny.gov/divisions/engineering/structures/repository/manuals/brman-usc/NYSDOT_bridge_manual_US_5-2019.pdf.*

Specifying Splitting Tensile Strength for Lightweight Concrete to Improve and Simplify Design

by Dr. Reid W. Castrodale, Castrodale Engineering Consultants PC

Lightweight concrete may have reduced tensile strength compared to normalweight concrete. If the tensile strength is reduced, aspects of design related to tensile strength, such as shear and development length of reinforcement, are usually affected.

The American Association of State Highway and Transportation Officials' (AASHTO's) bridge design specifications have included provisions that reflect this potential reduction to the properties of lightweight concrete since at least 1983. However, a variable had not been assigned to the reduction factor. Therefore, the factor had to be defined wherever it was needed and, without a variable assigned, the factor could not be inserted into equations. The current version of the *AASHTO LRFD Bridge Design Specifications*[1] contains a major revision to provisions addressing lightweight concrete that was adopted in 2015. The revision defined the concrete density modification factor, λ, in Article 5.4.2.8 and included the variable in all equations where it was appropriate.

For normalweight concrete, $\lambda = 1.0$. In Article 5.4.2.8, two approaches are provided to determine the value of λ for lightweight concrete. The first option is based on the ratio of a specified splitting tensile strength, f_{ct}, of lightweight concrete to the computed splitting tensile strength of normalweight concrete. This option is rarely used, but it can provide significant benefit when shear or development lengths are important factors in design.

Prior to 2015, the second option for determining λ, which is used when the splitting tensile strength is not specified, was based on the type of lightweight concrete: 0.85 for sand-lightweight concrete and 0.75 for all-lightweight concrete. The 2015 revision changed this approach by defining λ using the unit weight of concrete w_c, which is a great improvement for designers.[2] AASHTO LRFD specifications Eq. 5.4.2.8-2 is:

$$0.75 \le \lambda = 7.5\, w_c \le 1.0$$

Recent tests of lightweight concrete for a range of compressive strengths and types of lightweight aggregate[3,4,5] have shown that the splitting tensile strength of lightweight concrete often exceeds the computed tensile strength of normalweight concrete, which is not defined in the specifications, but can be determined by solving AASHTO LRFD specifications Eq. 5.4.2.8-1 (with $\lambda = 1.0$) for f_{ct}:

$$f_{ct} = \left(\frac{1}{4.7}\right)\sqrt{f'_c} = 0.213\sqrt{f'_c}\,(\text{in ksi})$$

An example of results from research is presented in **Table 1**, which shows splitting tensile strengths for a series of lightweight concrete bridge deck mixtures made with three types of lightweight aggregate and a normalweight control mixture.[4] Using a design compressive strength of 4.0 ksi for the deck concrete and the expression for f_{ct} shown previously, the predicted splitting tensile strength for normalweight concrete would be 0.426 ksi. All values of splitting tensile strength for the lightweight concrete in Table 1 are comfortably above this value; only the splitting tensile strength of the normalweight concrete is close to the predicted value. For this study, constituent proportions for the mixtures were held constant and the lightweight concrete compressive strengths were less than the normalweight concrete strength. Proportions of the lightweight concrete mixtures could have been adjusted to produce compressive strengths equal to the control. As shown in the last two columns of the table, the measured tensile strengths of the lightweight concretes were greater than the predicted tensile strengths computed using measured compressive strengths, whereas the measured tensile strengths of the normalweight concrete mixture were below the predicted value. These data indicate that, for these lightweight concrete mixtures, f_{ct} could be specified equal to the predicted splitting tensile strength using $\lambda = 1.0$.

Table 1. Splitting tensile and compressive strength test results (ksi) and comparison of test results to predicted splitting tensile strength for lightweight and normalweight bridge deck concrete mixtures (test data from Ref. 4)

	f_{ct}		f'_c		$\frac{f_{ct}}{(0.213\sqrt{f'_c})}$	
NWC	0.438		5.505		0.880	
Type of LWC	Sand	All	Sand	All	Sand	All
Slate LWA	0.490	0.461	5.135	4.685	1.021	1.005
Clay LWA	0.520	0.493	5.200	4.675	1.076	1.075
Shale LWA	0.510	0.465	4.980	4.550	1.079	1.029

Key: NWC = normalweight concrete; LWC = lightweight concrete; LWA = lightweight aggregate. The types of LWC are defined in Ref. 4.

A second example of test results, in this case taken from production of prestressed lightweight concrete girders, is presented in **Table 2** for three projects that all used the same mix proportions and type of lightweight aggregate.[5] As shown in the last three rows of data in the table, the measured splitting tensile strengths of lightweight concrete were greater than the predicted tensile strengths computed using specified compressive strengths. Again, these data indicate that, for this lightweight concrete mixture, f_{ct} could be specified equal to the predicted splitting tensile strength using $\lambda = 1.0$.

Table 2. Twenty-eight-day splitting tensile strength test results for three projects (from Ref. 5)

Project		AWS	Skagit	SR162
Count		3	10	4
Average f_{ct}	(ksi)	0.700	0.696	0.663
Minimum	(ksi)	0.675	0.613	0.643
Maximum	(ksi)	0.740	0.800	0.680
Range	(ksi)	0.065	0.187	0.037
Standard deviation	(ksi)	0.035	0.058	0.015
Average 28-day f'_c	(ksi)	11.578	10.832	11.845
Predicted f_{ct} using average f'_c	(ksi)	0.724	0.700	0.732
Specified f'_c	(ksi)	9.000	9.000	9.200
Predicted f_{ct} using specified f'_c	(ksi)	0.638	0.638	0.645
Average test f_{ct} / Predicted f_{ct}		1.097	1.090	1.027

Key: AWS = Airport Way South; Skagit = Skagit River Bridge decked bulb-tee girders; SR162 = Puyallup River Bridge WF74G.

Conclusion

Data show that the splitting tensile strength of lightweight concrete can reasonably be expected to approach or exceed the predicted splitting tensile strength of normalweight concrete. Therefore, it is reasonable for designers to specify f_{ct} for lightweight concrete to be equal to the predicted splitting tensile strength for normalweight concrete when shear or development lengths are important aspects of design. Specifying $f_{ct} = 0.213\sqrt{f'_c}$ eliminates the penalty for using lightweight concrete by setting $\lambda = 1.0$.

References

1. American Association of State Highway and Transportation Officials (AASHTO). 2017. *AASHTO LRFD Bridge Design Specifications*, 8th ed. Washington, DC: AASHTO.
2. Greene, G., R. Castrodale, and B. Graybeal. 2015. "Recent Changes in *AASHTO LRFD Bridge Design Specifications* Regarding Lightweight Concrete." *Proceedings*, 2015 National Accelerated Bridge Construction Conference, Florida International University, Miami. https://abc-utc.fiu.edu/wp-content/uploads/sites/52/2016/02/2015-ABC-Conference-Proceedings.pdf.
3. Cousins, T., C. Roberts-Wollmann, and M. Brown. 2013. *High-Performance/High-Strength Lightweight Concrete for Bridge Girders and Decks*. National Cooperative Highway Research Program, Transportation Research Board. Washington, DC: National Academies Press. https://doi.org/10.17226/22638.
4. Byard, B., and A. Schindler. 2010. *Cracking Tendency of Lightweight Concrete*. Prepared for the Expanded Shale, Clay and Slate Institute, Chicago, IL. Auburn, AL: Highway Research Center. http://www.eng.auburn.edu/files/centers/hrc/escsi2011.pdf.
5. Chapman, D., and R. Castrodale. 2016. "Sand Lightweight Concrete for Prestressed Concrete Girders in Three Washington State Bridges." *Proceedings*, National Bridge Conference, Precast/Prestressed Concrete Institute, Chicago, IL.

AASHTO LRFD Bridge Design Specifications: Factored Axial Resistance

by Dr. Oguzhan Bayrak, University of Texas at Austin

In response to a question received by the *ASPIRE*® team, this article explains the technical background for the calculation of factored axial resistance. The factored axial resistance of concrete compressive components can be calculated using in Section 5.6.4.4 of the 8th edition of the American Association of State Highway and Transportation Officials' *AASHTO LRFD Bridge Design Specifications*.[1]

To begin, Eq. 5.6.4.4-1 indicates that the factored resistance P_r can be calculated by multiplying the nominal axial capacity P_n by the resistance factor ϕ:

$$P_r = \phi P_n$$

The resistance factor ϕ in this expression is based on the net tensile strain (see Fig. C5.5.4.2-1 in ref. 1). With that stated, the failure mode for the case of pure axial compression is compression-controlled; therefore, ϕ = 0.75.

Equation 5.6.4.4-2 applies to members with spiral reinforcement:

$$P_n = 0.85\begin{bmatrix} k_c f'_c\left(A_g - A_{st} - A_{ps}\right) + f_y A_{st} \\ -A_{ps}\left(f_{pe} - E_p \varepsilon_{cu}\right) \end{bmatrix}$$

Equation 5.6.4.4-3 applies to members with tie reinforcement:

$$P_n = 0.80\begin{bmatrix} k_c f'_c\left(A_g - A_{st} - A_{ps}\right) + f_y A_{st} \\ -A_{ps}\left(f_{pe} - E_p \varepsilon_{cu}\right) \end{bmatrix}$$

As explained in commentary C5.6.4.4, the values of 0.85 and 0.80 that appear outside the brackets in Equations 5.6.4.4-2 and 5.6.4.4-3, respectively, place upper limits on the usable resistance of compression members to account for unintended eccentricity. Historically, this was done by specifying a "minimum eccentricity" that was in the range of 5% to 10% of the column cross-sectional dimensions. However, the approach of specifying a minimum eccentricity has been abandoned in modern design codes including the AASHTO LRFD specifications. Placing a cap on the factored resistance diagram (P-M interaction curves) avoids the danger associated with producing designs in a region of the P-M interaction diagram where little bending resistance can be accommodated (**Figure 1**). In all other parts of the P-M interaction diagram, unintended eccentricities can be easily handled without creating a compliance problem with the specifications or a safety problem in the worst-case scenario.

Prior to the 8th edition of the AASHTO LRFD specifications, the constant 0.85 appeared before f'_c in the above equations where the variable k_c now appears. The origin of this k_c factor dates back to research conducted at the University of Illinois Urbana-Champaign and Lehigh University, in which 564 normal-strength concrete columns were tested. The researchers concluded that there was a difference between the concrete compressive strength of the columns and that of the corresponding concrete test cylinders. Most, if not all, failures observed in the reinforced concrete column specimens occurred in the top portions of the column specimens. As a result, the researchers attributed the 15% difference between the strength of the in-place concrete and the strength of concrete cylinders to potential segregation of concrete and migration of cement paste and air toward the top of the column, when concrete is consolidated by using internal vibrators.

To make design provisions in the 8th edition of the AASHTO LRFD specifications applicable to a broader range of concrete compressive strengths, the factor k_c replaces the constant 0.85 before f'_c as it appeared in the 7th edition. The k_c term accounted for design compressive strengths exceeding 10.0 ksi. Therefore, k_c = 0.85 for $f'_c \leq$ 10 ksi; for $f'_c >$ 10.0 ksi, k_c is reduced at a rate of 0.02 for each 1.0 ksi of compressive strength in excess of 10.0 ksi to a minimum value of 0.75. Researchers found that reducing k_c from 0.85 to 0.75 accounts for the cover spalling observed in tests of high-strength concrete columns. This cover spalling behavior was found to be influenced by the following:

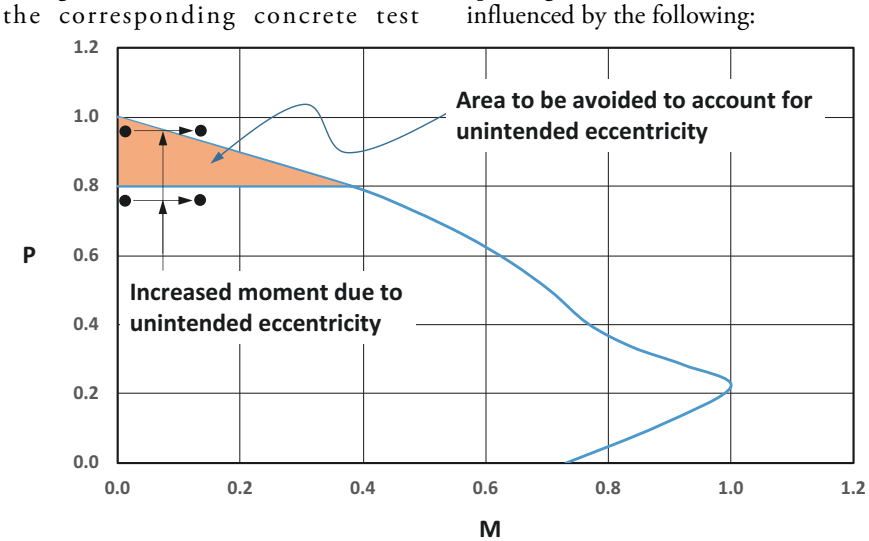

Figure 1. Upper limit on the usable resistance of compression members with tie reinforcement.

- Incompatibility of stresses in the unconfined cover concrete and confined concrete in the structural core;
- A plane of weakness created by the confining reinforcement (spirals or ties) that is used in relatively greater quantities in high-strength concrete columns, to comply with the AASHTO LRFD specifications; and
- Instability of cover concrete resulting from the interaction that takes place between the expanding structural core and the cover concrete at or near the axial compressive capacity.

Reference

1. American Association of State Highway and Transportation Officials (AASHTO). 2017. *AASHTO LRFD Bridge Design Specifications*, 8th ed. Washington, DC: AASHTO.

CONCRETE CONNECTIONS

Concrete Connections is an annotated list of websites where information is available about concrete bridges. Links and other information are provided at www.aspirebridge.org.

IN THIS ISSUE

https://cptechcenter.org/performance-engineered-mixtures-pem
This is a link to a website that gives details about the Performance Engineered Mixtures pooled fund project that is mentioned in the editor's note for the Focus article on p. 9.

https://www.pittsburghmagazine.com/Best-of-the-Burgh-Blogs/The-412/February-2018/Five-Fun-Facts-about-Pittsburgh-Bridges/
This is a link to a *Pittsburgh Magazine* feature with photos of several iconic bridges in Pittsburgh, Pa. The history of Pittsburgh's Roberto Clemente Bridge and other aesthetically notable bridges is the subject of a Perspective article on page 10.

http://www.aspirebridge.com/magazine/2012Fall/RichStreet.pdf
This is a link to an article in the Fall 2012 issue of *ASPIRE* about the Rich Street Bridge, which is discussed in the Perspective article on page 10.

http://ndotprojectneon.com
This is a link to a Nevada Department of Transportation website about Project Neon in Las Vegas, Nev. The Project Neon high-occupancy-vehicle connector flyover bridge is featured in a Project article on page 16 and a Concrete Bridge Technology article on page 30.

https://www.keepsandiegomoving.com/I-5-Corridor/gilman-drive-bridge-intro.aspx
This is a link to a website with videos and photos of the construction of the Gilman Drive Overcrossing at the University of California San Diego. The bridge is featured in a Project article on page 20.

https://ucsdnews.ucsd.edu/feature/building-connections-campus-celebrates-gilman-bridge-opening
This is a link to a news release about the opening of the Gilman Bridge that is featured in a Project article on page 20.

http://www.ltrc.lsu.edu/ltc_18/pdf/presentations/Session_37-I-49-I-220_Interchange__Segment_K-Phase_2__Shreveport,_LA.pdf
This is a link to an illustrated presentation on the construction of Segment K of Interstate 49 in Louisiana. The presentation provides details about the precast concrete segments and describes challenges of the project. The ramps of Segment K are featured in a Concrete Bridge Technology article on page 24.

http://www.i49shreveport.com/Site
This is a link to the official website for the Interstate 49 corridor project through Shreveport, La. Segment K of the project is featured in a Concrete Bridge Technology article on page 24.

https://www.dot.state.mn.us/bridge/lrfd.html
This is a link to access the Minnesota Department of Transportation's *LRFD Bridge Design Manual*, which contains details on the new MH-series shallow bridge beams. The development of the beams is the topic of a Concrete Bridge Technology article on page 34.

https://ftp.fdot.gov/file/d/FTP/FDOT%20LTS/CO/research/Completed_Proj/Summary_STR/FDOT_BC354_76_rpt.pdf
This is a link to the report on the vessel impact testing of the old St. George Island Causeway Bridge that is listed as a reference for the Concrete Bridge Technology article on page 36.

https://www.fhwa.dot.gov/publications/rtnow/17sep_oct_rtnow.pdf
This is a link to an FHWA news update that includes an article on a truck-platooning demonstration project in Virginia. The possible effects of truck platooning on bridge structures is the topic of the FHWA article on page 44.

https://www.fhwa.dot.gov/pavement/concrete/pubs/hif16006.pdf
This is a link to Federal Highway Administration (FHWA) Tech Brief FHWA-HIF-16-006, which provides information on the concept and applications of internal curing concrete. The use of internal curing concrete for bridge decks in New York is the topic of a Safety and Serviceability article on page 48.

https://www.dot.ny.gov/main/business-center/engineering/specifications/english-spec-repository/2019_5_specs_usc_tc_vol2_0.pdf
This is a link to the NY State Department of Transportation's *Standard Specifications*, which contain the new requirements for high-performance internally-cured concrete for bridge decks in Section 557. These requirements are mentioned in the Safety and Serviceability article on p. 48.

Photo Credit: New York State Thruway Authority