PROJECT

35TH STREET PEDESTRIAN BRIDGE

by John Hillman, Parsons Construction Group, and Brian Umbright, EXP

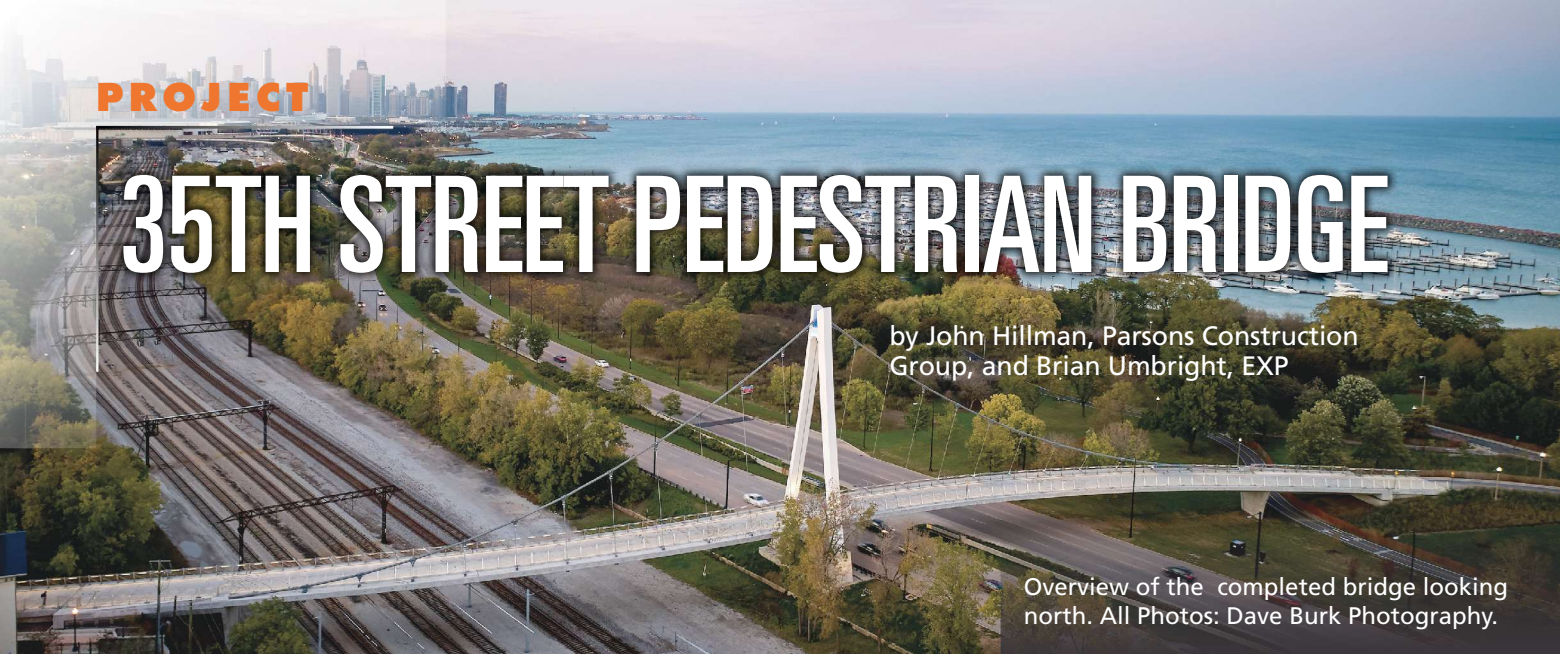

Overview of the completed bridge looking north. All Photos: Dave Burk Photography.

Architecturally, Chicago is considered one of the world's greatest cities. This recognition is due in no small part to the *Plan of Chicago*[1] or the "Burnham Plan," the early-20th-century vision of architects and urban planners Daniel Burnham and Edward H. Bennett. In particular, Burnham and Bennett advocated for protection of the Chicago lakefront with an extensive network of parks bordering Lake Michigan that could never be commercialized. In 1973, the Lake Michigan and Chicago Lakefront Protection Ordinance further solidified this commitment to a public lakefront and included requirements to provide universal access to the lakefront for all of Chicago's neighborhoods.

Over the years, the urban plan led to the construction of numerous bridges and underpasses to allow pedestrians to safely cross Lake Shore Drive and access the lakefront. The original 35th Street Pedestrian Bridge built in the 1930s was one such access point. However, by the early 21st century, the bridge no longer served its purpose. It was classified as structurally deficient and did not meet the requirements of the Americans with Disabilities Act.

Call for Proposals

In 2003, the Chicago Department of Transportation (CDOT)—in conjunction with the Chicago Architecture Foundation—initiated the "Bridging the Drive Competition" to solicit concepts for replacement structures for four pedestrian crossings of Lake Shore Drive, including the 35th Street Bridge. The City intended to create iconic bridges at each of these locations. The international competition garnered 67 proposals from 23 firms. The concept submitted by EXP was selected as the winning entry for the 35th Street location.

Project Challenges and Design Specifications

The 35th Street Pedestrian Bridge invokes the classic principles of a self-anchored suspension bridge, but with a twist. It crosses over Lake Shore Drive on a horizontally reverse-curved alignment, which provides for panoramic views of Lake Michigan and the Chicago skyline. The S-shaped curvilinear alignment became a necessity due to the unique site constraints—the western approach is between two historical landmarks, the Stephen A. Douglas Memorial and a former Civil War hospital. The alignment also minimizes the distance of the Lake Shore Drive crossing, limits the required approach grades, preserves a grouping of mature trees in Burnham Park, and achieves the required vertical clearances over Lake Shore Drive and the railroad.

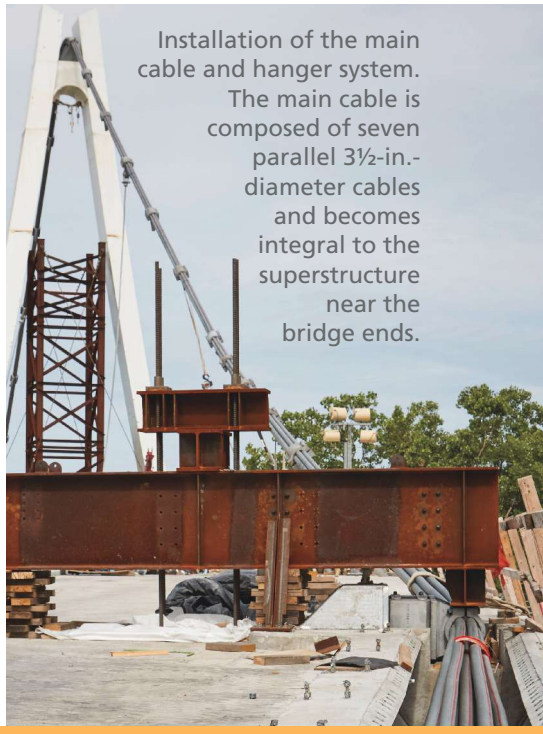

Installation of the main cable and hanger system. The main cable is composed of seven parallel 3½-in.-diameter cables and becomes integral to the superstructure near the bridge ends.

profile

35TH STREET PEDESTRIAN BRIDGE / CHICAGO, ILLINOIS

BRIDGE DESIGN ENGINEER: EXP, Chicago, Ill.

CONSTRUCTION MANAGER: CH2M, Chicago, Ill.

PRIME CONTRACTOR: McHugh/Araiza Joint Venture, Chicago, Ill.

POST-TENSIONING CONTRACTOR: James McHugh Construction Co., Chicago, Ill.

OTHER MATERIAL SUPPLIERS: Post-tensioning strand and hardware: DYWIDAG-Systems International USA, Bolingbrook, Ill.; Suspension cable: WireCo WorldGroup, Kansas City, Mo.

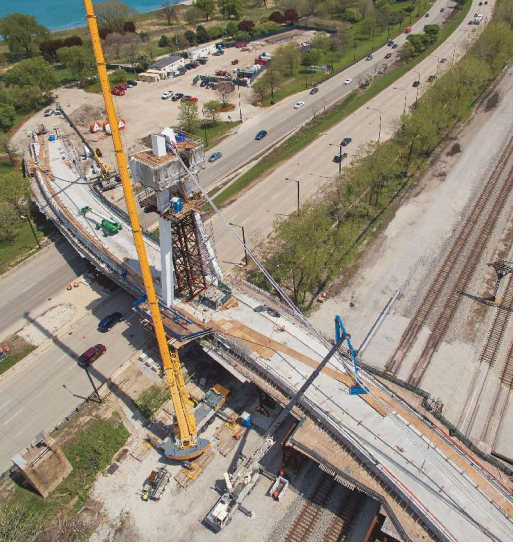

Aerial view during installation of the main cable. The suspension cable supports the outside of the horizontal reverse-curvature bridge.

The bridge's single suspension cable is aligned to support the outside of the curves on the respective spans. The result offsets the inherent torsional tendencies of curved beams. Simultaneously, the horizontal component of force in the skewed hangers and the forces induced in the ends of the deck from the anchorages of the suspension cable create a self-equilibrating suspension structure.

The bridge comprises two 250-ft-long main spans and two 60-ft-long approach spans, for a total length of 620 ft. The superstructure's cross section is composed of a triangular high-performance concrete (HPC) box girder, which is 32 ft 6 in. wide and accommodates a 20-ft-wide pathway. The position of the apex of the triangular section varies along the length of the bridge. This variation not only reflects the asymmetrical configuration of the suspension cable but also results in an efficient cross section. The section along the free edge at the inside of the superstructure curvature is deeper and stiffer than the section along the outside, which is supported by the cable hangers.

The rigidity of the closed cross section helps control torsional rotations resulting from the eccentricities of the center-of-mass and hangers. Additional compensation for the torsional moments is provided by longitudinal post-tensioning (PT) tendons placed along the bottom slab at the inside of the curves. The tangential component of force of these tendons applies a counter-clockwise rotation that offsets a portion of the dead load torsional moment in the section. The nearly 6000 kip anchorage force from the longitudinal PT also balances the enormous anchorage forces from the main suspension cable. To help with internal stability of the box section, the superstructure also contains transverse PT tendons spaced roughly 5 ft apart along the entire length of the bridge.

The aerodynamic cross section combined with the concrete mass serves to minimize pedestrian- and wind-induced accelerations. This desired dynamic behavior and the reduced maintenance costs were two of the major reasons why concrete was selected instead of steel for the superstructure. During the design phase, the behavior of the structure was validated through wind and vibration analyses.

For the superstructure and substructure components, specifications dictated the use of HPC with minimum compressive strengths of 6000 and 4000 psi, respectively. CDOT, which has long been a proponent of HPC, developed a thorough performance specification that required targeted proportions but gave the contractor ultimate flexibility and responsibility for meeting strength and performance parameters.

The contractor was also given broad latitude to use air-entraining admixtures and high-range water-reducing

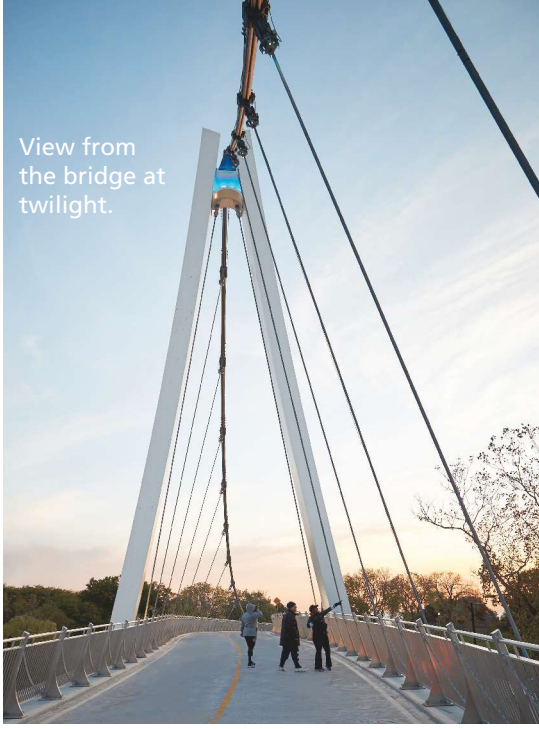

View from the bridge at twilight.

admixtures to meet the physical-property parameters. To increase durability, chloride permeability resistance was specified to be less than 2000 coulombs at 28 days. To further enhance durability and improve final pathway smoothness, a 2-in.-thick latex-modified concrete overlay was placed on the box girder.

Extra care and attention were taken to design bridge details that would enhance the unique structural form of the bridge. The 117-ft 9-in.-tall central pylon uses an A-shape to resist all lateral-force components. The two steel trapezoidal-box legs of the pylon have slow, graceful curves that complement the natural curvature of the suspension cable. To simplify constructability and control long-term creep deflections in the superstructure, the pylon foundation pedestals are made of reinforced concrete supported on micropiles.

The piers efficiently transmit the torsional forces out of the superstructure into the foundations and have the same lines as the pylon, while upholding the asymmetrical character

CHICAGO DEPARTMENT OF TRANSPORTATION, OWNER

BRIDGE DESCRIPTION: Self-anchored, mono-cable suspension bridge on a reverse circular curve with a triangular-shaped post-tensioned concrete box-girder superstructure

STRUCTURAL COMPONENTS: 620-ft-long cast-in-place, post-tensioned concrete box girder comprising two 250-ft-long main spans and two 60-ft-long approach spans; cast-in-place concrete piers, pylon footings, and abutments; and micro-pile foundations

BRIDGE CONSTRUCTION COST: $26 million

AWARDS: Grand Award, American Council of Engineering Companies (ACEC), 2018; Honor Award and Best in Category – Structural Systems, ACEC of Illinois, 2018.

Elevation view from northbound Lake Shore Drive during construction. The contractor chose to construct a temporary bridge to build the bridge.

of the overall design. Longitudinally, the piers are thin walls with no bearings provided at these supports. Instead, the superstructure was connected to the piers using PT bars after all hangers and girder PT were completed, allowing for reduced moments in the piers from long-term creep of the superstructure.

There are closed abutments at each end of the structure, with retaining walls that continue the line of the sloped edge of the superstructure. The overall slender appearance of the structure was maintained by avoiding earth anchorage at the abutments and using the self-anchoring design. The superstructure is supported on disc bearings at the abutments, resulting in only four bearings in the entire structure. To accommodate pedestrian clearances at the hangers, the out-to-out width of the superstructure follows a slightly different alignment than the centerline of the traveled way, and they only coincide at the pylon. Thus, the abutments are narrower than the superstructure cross section, and the setback provides an ideal location to leave the ends of the main suspension cables exposed.

The scale of the bridge posed some interesting challenges regarding the design of the main suspension cable, which was too short for conventional spinning but too long for an off-the-shelf structural single-strand system. A compromise was reached by developing a cable system comprising a cable assembled out of seven 3½-in.-diameter conventional structural strand cables bundled together. Each cable was placed individually over a saddle at the pylon and anchored at the end of the bridge with its own spanner nut to accommodate force adjustments. Once the main cables were in place, they were banded together with clamps that comprised the clevis connection for the hanger cables. All the suspension cables and 2⅜-in.-diameter hangers—ASTM A586 Grade 2 strand (minimum tensile strength of 220 ksi) with Class A weight galvanized coating—have been left exposed and visible.

To transfer the anchor force of the main cable all the way to the end of the superstructure, the cables deviate both vertically and horizontally at the pier locations and become internal to the superstructure cross section. The vertical deviation is an outcome of the catenary drape and grade, and the horizontal deviation is aided by a custom horizontal rocker bearing at the deck level. Subsequently, the only deviation at this point is horizontal, and the seven cables are splayed to provide adequate spacing at the hexagonal anchorage at the end of the bridge.

The bridge has custom-designed stainless steel railings that mimic the shapes of other elements. Throughout the bridge, decorative LED lighting is hidden within the railing and suspension system to be highly functional but not

Customized triangular box-girder superstructure formwork in progress.

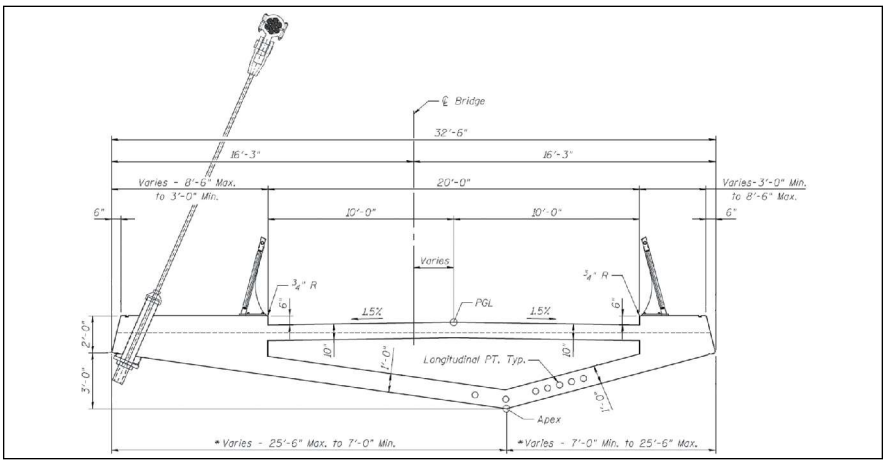

Typical cross section of the cast-in-place concrete box girder showing the triangular void. All Figures: EXP.

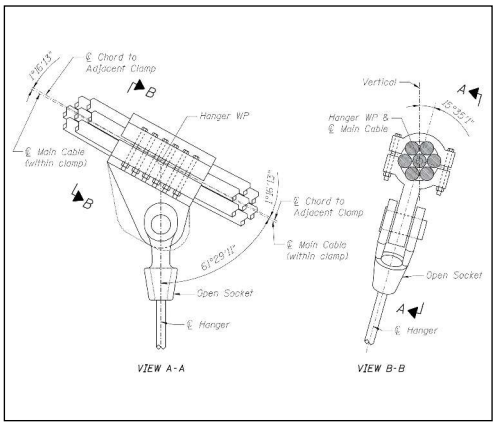

Main cable-clamp detail at a hanger. All cables are ASTM A586 Grade 2 strand with Class A weight galvanized coating.

detract from the simplicity of the bridge form. To enhance the design's simplicity, the bridge has been left in its natural concrete state and only the steel pylon elements are painted.

The original design provided for a cast-in-place segmental scheme using form travelers for the superstructure to limit formwork requirements. However, the contractor chose to use a more conventional cast-in-place method—essentially building a bridge to build the bridge. An elaborate steel beam and tower falsework system was erected with a plywood deck to create a level working platform from which the contractor built the elaborate customized formwork system to place concrete for the superstructure. The concrete-placing sequence was broken down into five longitudinal castings with the bottom and top slabs of the cross section placed separately each time. To avoid erecting and pulling formwork in the triangular void, the contractor used lightweight foam blocks that could stay in place as formwork for the top slab. The formwork and falsework were not removed until the main cable and hangers were installed and the bridge was self-supporting, and only then did the beauty and elegance of the final form become evident to the public.

Conclusion

The 35th Street Pedestrian Bridge opened in November 2016 after more than two years of construction. This project was funded by a partnership of the City of Chicago, the State of Illinois, and the Federal Highway Administration. By its very nature, the project was more expensive than a traditional crossing, but the costs are justified by the bridge's unique design, architectural significance, and positive impact on the surrounding community. Because the bridge design pulls the pathway away from the roadway and railway, the crossing is relatively tranquil. Also, the curvilinear alignment provides ever-changing vistas for pedestrians to enjoy. Finally, the residents of Chicago's Bronzeville neighborhood have gained an essential link to the lakefront and a beacon for their community.

John Hillman, previously with EXP, is now technical director with Parsons Construction Group in Westminster, Colo., and Brian Umbright, is vice president, Transportation, with EXP in Chicago, Ill.

Reference

1. Burnham, D.H., and E.H. Bennett. 1909. *The Chicago Plan.* Chicago, Ill.: The Commercial Club. https://archive.org/stream/planofchicago00burnuoft.

AESTHETICS **COMMENTARY**

by Frederick Gottemoeller

An underappreciated characteristic of a structure's alignment is how it aims the users' view toward a particular feature. The extreme case is a straight railroad track. When you look along such a track, you can hardly take your eyes off the distant point where the rails seem to come together. Straight bridges direct your eye toward whatever lies ahead along their tangent. In contrast, curved bridges sweep your eye over the landscape, so you must focus in turn on all of the features of the visual field. In the case of the 35th Street Bridge, that visual field is the expansive shore of Lake Michigan or, going the other way, the architecture of the Chicago skyline.

The hanger arrangement, which supports the deck first on one side of the bridge and then the other, further directs your point of focus. When the hangers are seen together as you look along the bridge, they form a curved plane along the outsides of the curves, which encourages you to concentrate on whatever you can see from the inside of the curve. Thus, the hanger system subtly switches your focus from one side of the bridge to the other.

The sloped soffits of the triangular cross section make it impossible to judge the depth of the cross section at the section's apex. Travelers along Lake Shore see only the depth of the much thinner aerodynamic edge. To them, the bridge seems far thinner, and thus lighter, than it really is.

Finally, this bridge asserts a sense of unity. The angles of the tower legs, the hangers, the aerodynamic edges, the angles of the piers and the abutment walls, and even the stanchions of the railings are all sloped in the same direction and at similar angles. The curves of the tower legs emulate the curves of the suspension cables. Each part seems perfect for this bridge and would look out of place on another. This bridge is a masterpiece. The designers and the City of Chicago can be proud of having brought it into existence.