PROJECT

by Jay Holombo and Peter Smith, T.Y. Lin International, and Jon Grafton, Oldcastle Precast Inc.

North Milliken Avenue Railroad Underpass Bridge

Value-engineered redesign demonstrates economy of high-performance precast concrete

By allowing the contractor to build the North Milliken Avenue Railroad Underpass Bridge with high-performance precast concrete girders instead of structural steel, the City of Ontario has realized significant construction cost savings, reduced construction impacts, and eliminated future maintenance painting costs. All Photos: Jay Holombo.

The value-engineering cost proposal (VECP) redesign of the North Milliken Avenue Railroad Underpass Bridge demonstrates that significant savings can be achieved by using high-performance precast concrete instead of structural steel for railroad underpass structures with spans exceeding 80 ft. Further benefits of high-performance precast concrete demonstrated by this VECP redesign include rapid construction, enhanced aesthetics, and low maintenance.

Project Background

Located less than ¼ mile south of an interchange with Interstate 10, this busy railroad crossing is at the nexus of a significant freight and a commercial truck corridor. Prior to construction, exiting truck traffic backed up onto the freeway when blocked by a train crossing North Milliken Avenue, causing major delays and a significant safety hazard. The railroad needed to be elevated over the arterial because of the proximity and geometry of an adjacent freeway interchange to the crossing. As a result, the railroad underpass bridge is a highly visible element in the community.

Elevating the line at the underpass approaches required the construction of a precast T-wall-based retaining wall system extending approximately one half mile on both sides of the tracks. This was needed to meet right-of-way requirements. The underpass and approaches were constructed in two phases, allowing the busy railroad line to continue in full operation during construction.

Initially designed as a steel girder bridge with a steel plate forming the deck, the underpass is a two-span bridge measuring 171 ft long by 52 ft wide. Seven-foot-deep precast concrete fascia beams on each side support maintenance walkways, railings, and communication conduit. They are designed to be sacrificial to protect the main structural beams and can be removed and replaced if there is ever an accidental over-height truck impact. The fascia beams were cast with an architectural formliner to give the exterior surface an ashlar-stone appearance bordered with granite bands, which gives the overall structure a pleasing profile that blends well with the adjacent T-wall panels.

VECP Process

During the bidding phase, an alternate superstructure design using

profile

NORTH MILLIKEN AVENUE RAILROAD UNDERPASS BRIDGE / ONTARIO, CALIFORNIA

BRIDGE DESIGN ENGINEER: T.Y. Lin International, San Diego, Calif.

PRIME CONTRACTOR: C.C. Myers Inc., Rancho Cordova, Calif.

PRECASTER: Oldcastle Precast, Perris, Calif.—a PCI-certified producer

POST-TENSIONING CONTRACTOR: Dywidag Systems International (DSI), Long Beach, Calif.

precast, prestressed adjacent box girders was evaluated. This evaluation demonstrated significant cost savings and reduced fabrication time required for the precast concrete box girders versus the as-designed structural steel girder system. The precast design required some minor modifications to the foundation size due to the added weight of the concrete girders. However, when all costs were included, the net savings to the project was approximately $900,000, which was split between the contractor and the owner.

A further benefit of using a precast concrete box-girder superstructure is that bridge maintenance painting operations are not required.

A further benefit of using a precast concrete box-girder superstructure is that bridge maintenance painting operations are not required, as would be necessary for the as-designed steel girder system.

Redesigned Bridge Details

The redesigned two-span underpass bridge consists of 26 precast, prestressed box girders supporting ballast, waterproofing, and two mainline tracks. Ballast curbs were cast as an integral component of the exterior girders. Each span is transversely post tensioned at the quarter points within each span.

Each 4-ft-wide box girder contains fifty-six 0.6-in.-diameter strands and relatively thick bottom and top flanges of 9 and 10 in., respectively, to meet the stringent American Railway Engineering and Maintenance-of-Way Association (AREMA) strength, service, and deflection requirements. A net upward permanent deflection of 3 in. at midspan was anticipated after placement of ballast. A buildup of rubberized asphalt was used to ensure sufficient transverse and longitudinal slope to maintain drainage off of the bridge.

The architectural features of the North Milliken Avenue Railroad Underpass Bridge could not be modified as part of the redesign process. These features included formliners, coloration, and decorative column pilasters, which distinguish this highly visible gateway to the community.

The fascia beams, which are conventionally reinforced, support pedestrian walkways and communication conduit. To minimize the amount of formliner needed, the precast fabricator developed an innovative approach where the exterior was cast as 7.5-ft-long panel segments. These panel segments were then placed in the forms and cast with the rest of the fascia box girder, resulting in significant savings while meeting the aesthetic requirements of the project.

The bridge bent consists of a cast-in-place concrete cap beam with four 4.5-ft-diameter columns supported by pile caps. Headed reinforcement was used for footing stirrups and the cap beam as part of the redesign to reduce reinforcement congestion and simplify the detailing and construction efforts. Piers and abutments are hidden by decorative concrete column pilasters. These pilasters are hollow, with large blocks of differing shapes to form a cap. These caps were redesigned as part of the VECP process, allowing the contractor to fabricate them on site as precast elements as a means of reducing the cost of formliner and to accelerate construction. The connection between the cap and the column consists of a neoprene pad to prevent localized spalling and grouted No. 8 reinforcing bars in corrugated metal tubes to provide the necessary strength.

Temporary traffic barriers bolted directly to the top of the precast concrete box girders served as a ballast retainer and a safety fence support during construction of the second stage resulting in significant time and cost savings.

CITY OF ONTARIO, OWNER

BRIDGE DESCRIPTION: Two-span, precast, prestressed concrete box-girder, railroad underpass bridge

STRUCTURAL COMPONENTS: Twenty-six 84.5-ft-long, 62-in.-deep, precast, prestressed concrete box girders supporting tracks, ballast, and waterproofing. Four 84.5-ft-long, precast concrete fascia beams supporting a walkway and serving as sacrificial beams; cast-in-place pier cap, and circular columns with pile caps

BRIDGE CONSTRUCTION COST: $5 million ($561/ft^2)

AWARDS: 2014 Precast/Prestressed Concrete Institute (PCI) Design Award in the Best Nonhighway Bridge category

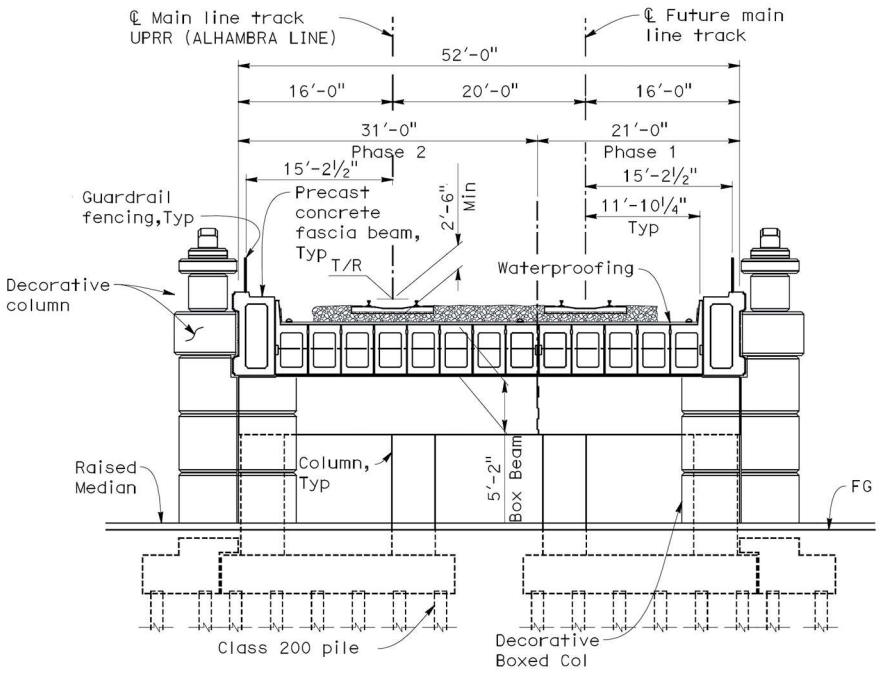

The redesigned bridge utilizes 26 high-performance precast, prestressed concrete box girders supporting train loading, tracks, ballast, and waterproofing. Constructed in stages, the beams are connected with cement grout and transverse post-tensioning at the quarter points within each span. Drawing: T.Y. Lin International.

Challenges

Schedule

To meet the contractor's schedule, fabrication had to begin 3 months after the award of the construction project. However, to accept the VECP, the owner required a completely new set of plans, specifications, and estimates (PS&E) for the bridge underpass. The first submittal of PS&E was delivered within 6 weeks of receiving the notice-to-proceed. Review, resolution of all comments, and approval from the City of Ontario; the San Bernardino Association of Governments (SANBAG), which was the sponsoring metropolitan planning organization; and Union Pacific Railroad, were completed within an accelerated, 6-week duration.

Vertical Clearance

Another project challenge was the limited vertical overhead clearance. Vertical clearance requirements limited the depth of the box girders to 5.2 ft. With spans of 83 ft, the span-to-depth ratio (S/D) of 15.8 is 38% greater than that recommended in Section 17.1.3.1 of the PCI *Bridge Design Manual*. Meeting this depth required utilizing a relatively high concrete compressive strength of

To reduce the cost of the formliner, the manufacturer sequentially cast 7.5-ft-wide precast concrete panel segments that were then placed in the forms when the fasçia beam was cast, with excellent results.

9 ksi and optimizing girder dimensions so that the required prestressing force did not exceed the available stressing bed capacity of 2400 kips at the fabrication plant. The shape was developed in cooperation with the designer and precaster without the need for custom form fabrication.

Construction Staging

Construction staging required the existing tracks to remain in service while the southern half (Phase 1) of the grade separation was under construction. Completion of the first stage of construction utilized AASHTO "Type K" barrier for a temporary concrete railing that was bolted directly to the top of the box girders and functioned as a ballast retainer and temporary hand railing support. After transfer of the rail traffic to Stage 1 construction, Stage 2 was constructed over the existing tracks. Stage 1 and Stage 2 construction are connected with 1.25-in.-diameter, high-strength rods that are post-tensioned transversely through the box girders in ducts at the quarter points within each span that were later grouted. Although the transverse post-tensioning provides a redistribution of loading, each box girder is designed to independently carry approximately half of the Cooper E80 train load.

Seismic Design

Redesign efforts required consideration of seismic design as a result of the increased mass provided by the concrete superstructure. AREMA requires analysis for three separate earthquake events to include serviceability, ultimate, and survivability limit states. Each earthquake corresponds to a different limit state. Since the bridge is relatively short, the response is dominated by the abutments longitudinally, and the bent capacity is designed for the transverse demands. To obtain the required connection stiffness between the superstructure and the abutments and bent, each end of the bridge girders is keyed in place with a 3.0-in.-diameter, Grade 50 solid steel rod that was placed after erection. At the abutment walls, the rods were grouted in both the girder and abutment, but at the bent, the rods were only grouted in the bent cap.

Summary

The value-engineering redesign of the North Milliken Avenue Railroad Underpass Bridge demonstrates that high-performance precast concrete is ideal for railroad bridge spans greater than 80 ft, and has better economy and faster production than equivalent steel spans. The City of Ontario and the surrounding community further benefitted from an accelerated construction schedule and reduced future maintenance costs. Redesign of the pilaster caps and the fascia beams allowed for significant cost and schedule savings while maintaining the original designer's vision of a highly visible and attractive gateway to the community.

Jay Holombo is a project manager and Peter Smith is a senior bridge engineer for T.Y. Lin International in San Diego, Calif. Jon Grafton is the manager of business development western region for Oldcastle Precast Inc. in Perris, Calif.

For additional photographs or information on this or other projects, visit www.aspirebridge.org and open Current Issue.